FOREWORD

This is a revised edition of the PDS (Pre-Delivery Service) manual of TOYOTA vehicles and hybrid vehicles. This manual contains many mechanisms and features that are common in current models. It has been modified so that the PDS technicians can understand the content and procedure of each operation from the illustrations and they can use this manual as a basic edition for the introduction of the PDS.

Customers' demands for vehicles range widely over quality, safety, performance and environment-friendliness. In particular, their demands for quality are increasing and becoming severer.

It is when a customer receives a new vehicle (when a new vehicle is delivered) that he/she has the greatest expectations for the vehicle. However, we cannot respond the expectations if the quality of the delivered vehicle is poor. To live up with the customers' expectations and guarantee their satisfaction, we have to ensure high level of delivering quality.
The PDS is very important and essential for this.

We hope that the PDS technicians will read this manual thoroughly and carefully in order to provide customers' vehicles with high quality and to ensure their satisfaction.

TOYOTA MOTOR CORPORATION

©2007 TOYOTA MOTOR CORPORATION

All rights reserved. This book may not be reproduced or copied, in whole or in part, without the written permissions of Toyota Motor Corporation.

PRE-DELIVERY SERVICE MANUAL

1. INTRODUCTION IN
2. PDS ITEMS IT
3. CHECK SHEET EXAMPLE CS
4. PDS OPERATION OP
5. VEHICLE DELIVERY INSPECTION DI

1. INTRODUCTION

		Page
A.	CONTENTS OF THIS MANUAL……..……	2
B.	DEFINITION OF PDS…….….	2
C.	BEFORE PERFORMING PDS……...…….	2
D.	MAIN POINTS OF INSPECTION…….……..……..	4
E.	DETERMINING MALFUNCTIONS……..…..…..	5
F.	IMPORTANCE OF BEING THOROUGHLY FAMILIAR WITH THE OWNER'S MANUAL…….……..…....	5
G.	NECESSITY OF VEHICLE DELIVERY INSPECTION…..	5
H.	REPORTING OF PDS RESULTS……	6
I.	PRECAUTIONS…….…….	7
J.	WORK SAFETY…….…….	9
K.	PRECAUTIONS FOR HANDLING HYBRID VEHICLES..	9
L.	LONG-TERM STORED VEHICLES…….…...……	10
M.	REQUIRED FACILITIES/TOOLS…….….	10

INTRODUCTION

A. CONTENTS OF THIS MANUAL

This is a comprehensive manual which explains the proper PDS (Pre-Delivery Service) such as inspection items and procedures for the technician inspecting new vehicles.
Please read this manual thoroughly and carefully and follow guidelines given in order to properly perform the PDS.
This manual contains common features and functions in various models. As some features or inspection items may vary by the model and specification, this manual should be used by deleting or adding inspection items according to the vehicle you are working on.
The inspection items and contents focus on functional inspections and the illustrations are representative examples.
The inspection procedures for some mechanisms or features of the vehicle you are working on may differ from those in this manual. In such a case, refer to the Owner's Manual.

B. DEFINITION OF PDS

The PDS (Pre-Delivery Service) refers to the inspections to confirm that new vehicles have enough quality to be delivered to customers. The PDS is performed immediately upon delivery of vehicles to a dealership in order to inspect the finished condition of new vehicles and the operation and installation of each functional component.

C. BEFORE PERFORMING PDS

When any of the PDS items cannot be performed by a dealership due to its facilities, a part or all of them can be performed by a distributor. In such a case, you should properly arrange the distribution of the inspection items to the dealership and the distributor and make sure all the items are to be performed. All new vehicles should be fully inspected and confirmed to have enough quality before being delivered to customers.
We hope that you will carry out the PDS by reading the inspection items and procedures on this manual and by arranging the most effective and suitable inspection procedures to your facilities.

TIMING OF PDS:

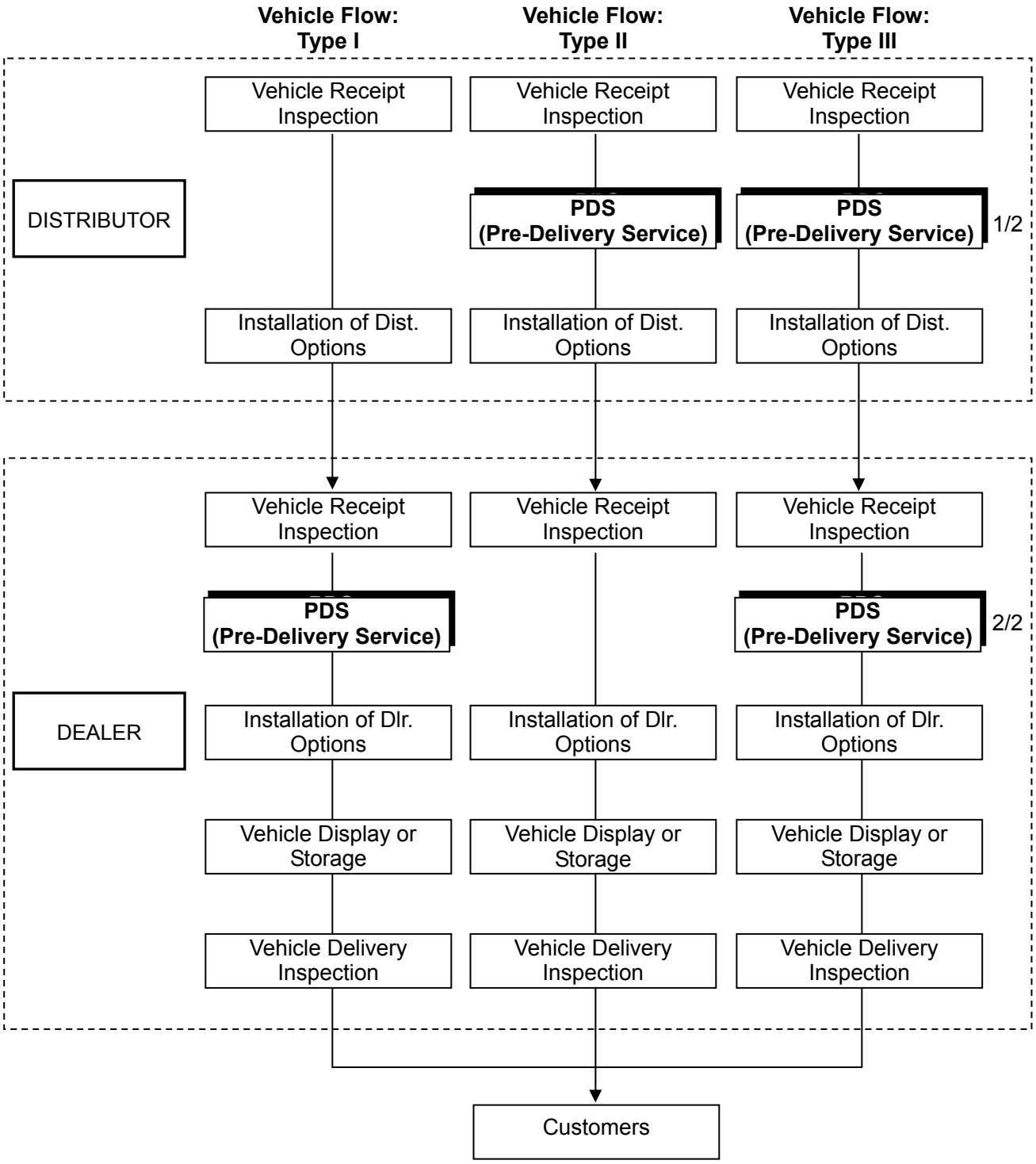

D. MAIN POINTS OF INSPECTION

Inspection Range:

All Areas Possible to be Checked Visually and by Hand without Disassembling Using Any Tools

1. Appearance Inspection: Visually and by Hand
   - Assembling

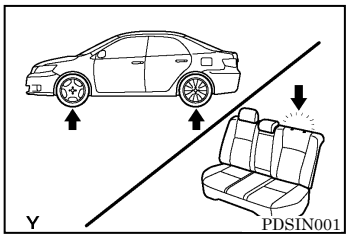

Wrong or Missing Part

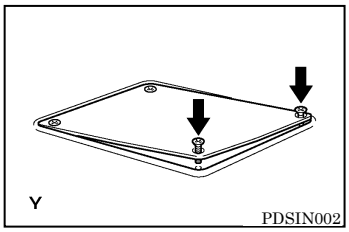

Looseness

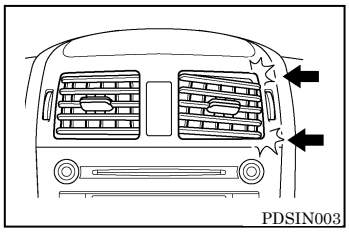

Disengaged Part

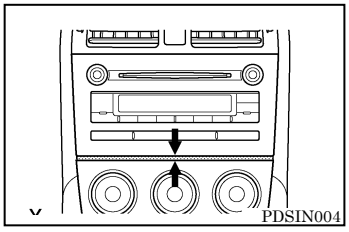

Gap

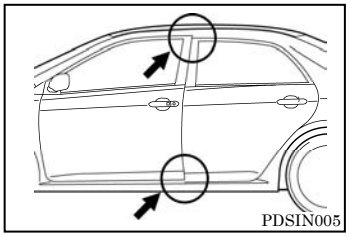

Step

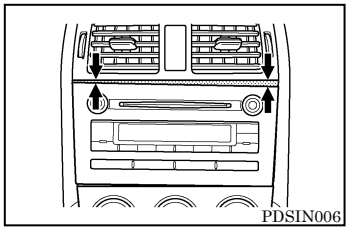

Deviation

   - Damage

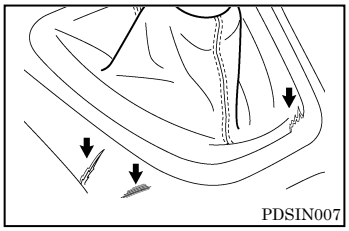

Scratch, Flaw or Crack

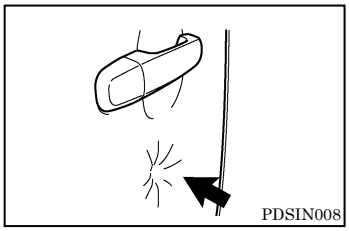

Dent

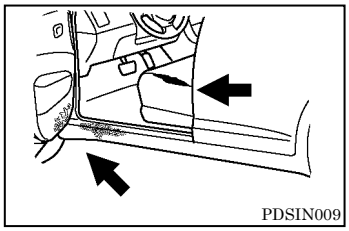

Dirt, Discoloration or Rust

   - Paint Finish

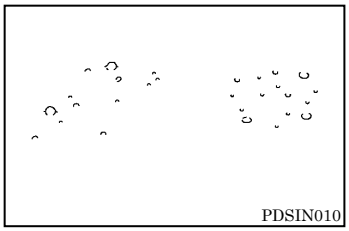

Particles or Cissing

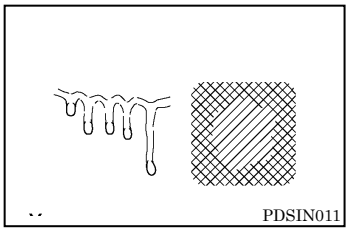

Paint Run or Poor Hiding

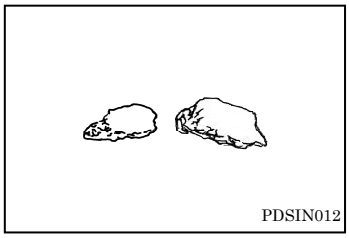

Penetration

2. Functional Inspection: Visually and Using Ears and Hand with Vehicle Running

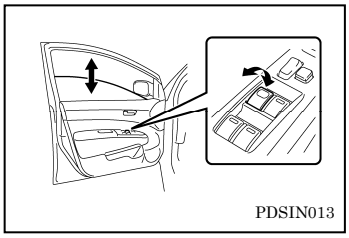

Proper Operation

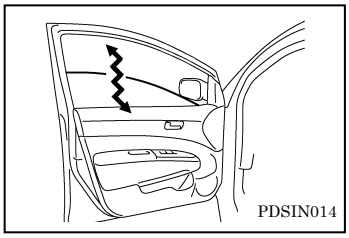

Smooth Operation

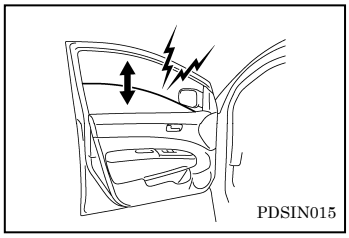

Abnormal Noise or Vibration

E. DETERMINING MALFUNCTIONS

- You should determine whether it is a malfunction or not with putting yourself in a customer's place. For example, the followings should be determined as a malfunction: A part that is apparently broken and a part where you feel strange.
- You should eliminate malfunctions you found before a vehicle is delivered to a customer.
- For details on adjustments, repairs and standard values for malfunctioning parts, refer to the Repair Manual of the vehicle you are working on.

F. IMPORTANCE OF BEING THOROUGHLY FAMILIAR WITH THE OWNER'S MANUAL

Some features and functions of vehicles may vary by the model. Even on the same model, they can vary by the grade or destination.
Because this manual is intended for worldwide distribution, the PDS consists primary of inspections of widely available mechanism and features.
Therefore, to perform the PDS of a given vehicle without fail, it is necessary for the PDS technician to be thoroughly familiar with the Owner's Manual of the particular model and to know the proper operation of the functions and features.

G. NECESSITY OF VEHICLE DELIVERY INSPECTION

During the time between the PDS and the delivery to a customer, a vehicle goes through several processes such as being displayed in a showroom, being placed in inventory and having dealer option parts installed. A vehicle could possibly sustain damage in these processes. Therefore, make sure to perform the vehicle delivery inspection.

H. REPORTING OF PDS RESULTS

To help us constantly improve new vehicle quality, it is requested that you report problems occurred repeatedly and problems occurred in manufacturing/shipment processes to TMC (Toyota Motor Corporations, Inc.) by Field Technical Report through your distributor.
It is also requested that you report the collected problem information to other staff and prevent a recurrence of similar problems.

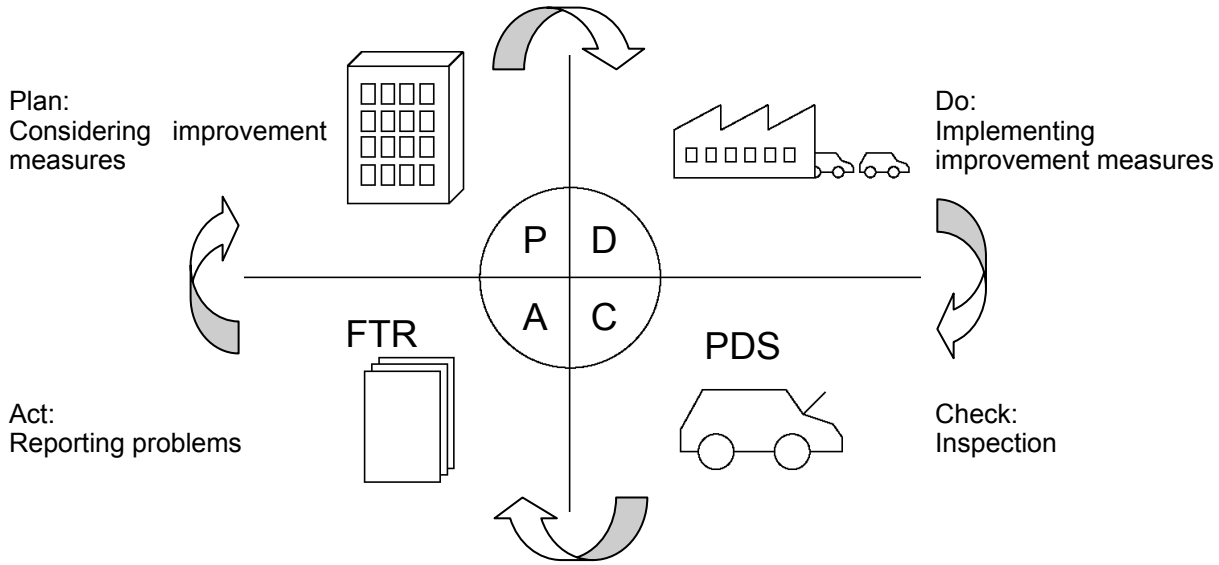

PDSIN017

I. PRECAUTIONS

When performing the PDS, always follow the guidelines below in order to protect new vehicles from scratches or dirt.

1. Prevention of Dirt

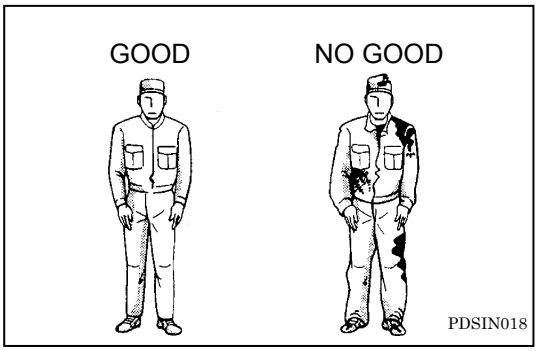

Always wear a clean, well-fitting uniform, a cap and safety shoes.

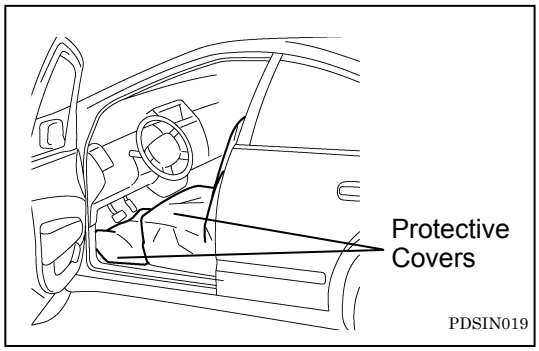

Put protective covers on the vehicle before servicing.

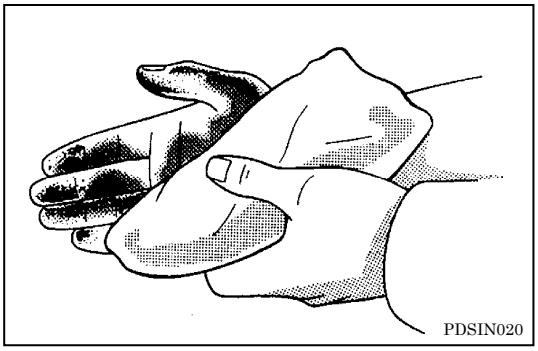

Always keep your hands clean. If your hands are soiled, clean them immediately.

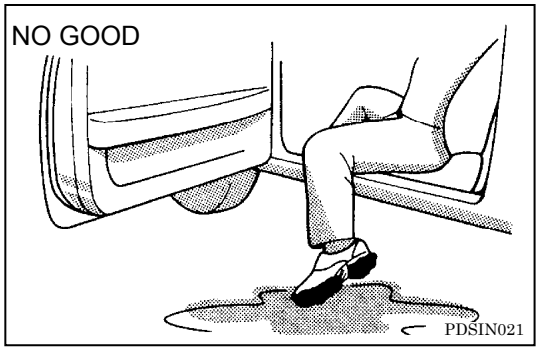

If the floor is soiled, clean it immediately. Never enter the cabin with dirty shoes.

2. Prevention of Damage

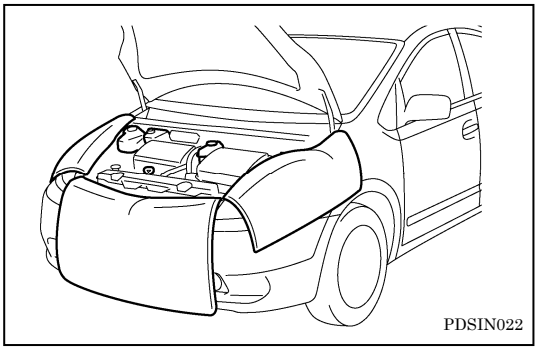

Put protective covers on the vehicle before servicing.

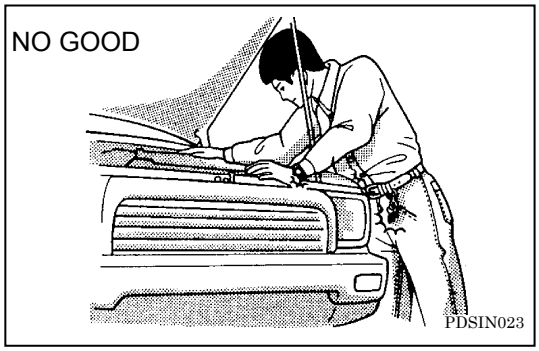

Keep yourself free from things that could scratch the vehicle when servicing.
Example:
A belt buckle, a ring, a watch, long fingernails and a key chain.

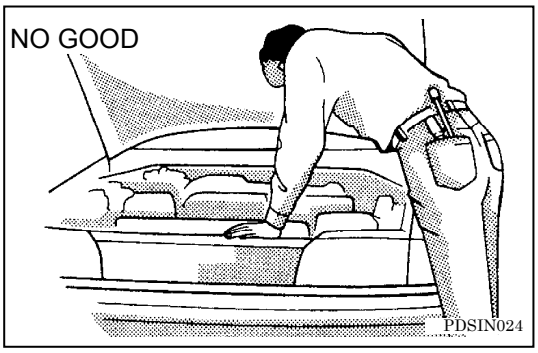

Return tools to a tool stand and never carry them in your pocket.
Never lean against or put your knees on the vehicle.
Never put a check sheet on the vehicle when filling it in.

Secure enough space for a servicing area to protect the vehicle from damage when any doors are opened.
(If it is difficult to find such a space, attach protectors to the doors and protect them from damages.)

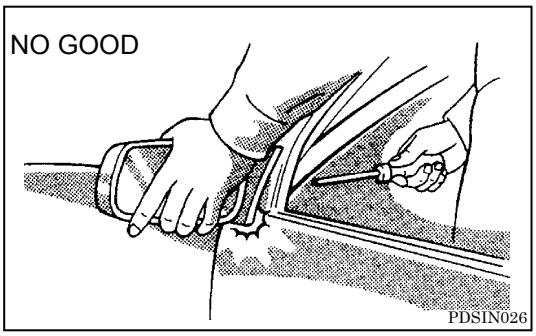

When installing a part, pay attention and take protective measures not to damage the part and the vehicle.

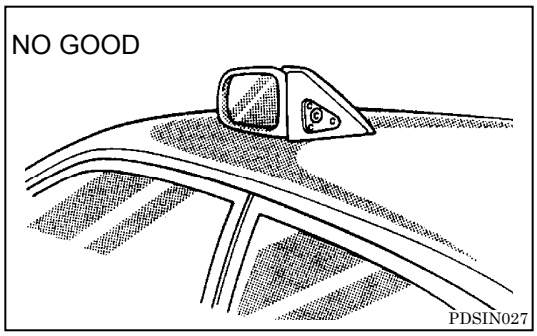

Never place tools, parts or a binder on the engine hood, roof and luggage compartment.

Implementation of 5S

- SEIRI:
  This is a process for identifying whether certain items are needed and those that are not needed are immediately discarded to use space effectively.
- SEITON:
  This is a process for sorting tools and parts in order to facilitate their use.
- SEISO:
  This is a process for keeping everything in the workplace clean. Always keep equipment in full working order so that it can be used at any time.
- SEIKETSU
  This is a process for maintaining the SEIRI, SEITON and SEISO conditions in an effort to prevent every possible problem from occurring. It is also a process for keeping your workplace clean by classifying everything and eliminating unnecessary items.
- SHITSUKE
  This process involves extensive training to make a person a proud Toyota employee.

J. WORK SAFETY

- When working with two or more people, make sure to check safety for each other.
- When working with the engine running, make sure to provide ventilation.
- When working on high-temperature, rotating, sliding or vibrating parts, take extra care not to injure or burn yourself or others.
- When jacking up the vehicle, make sure to support the specified locations with a safety stand.
- When lifting up the vehicle, use appropriate safety equipment.

K. PRECAUTIONS FOR HANDLING HYBRID VEHICLES

CAUTION:
The hybrid system contains high-voltage circuits. Be sure to handle the system correctly. Failure to do so may result in electrical shock or electric leakage.

- All high-voltage wire harness connectors are colored orange. The HV battery and other high-voltage components have “High Voltage” caution labels. Do not carelessly touch these wires and components.
- The temperature of the hybrid system can be high. Do not carelessly touch it.
- Before servicing components in the engine compartment, make sure to turn OFF the power switch. When the READY light in the combination meter illuminates, the engine can start or stop automatically.
- Never fill washer fluid when the hybrid system is hot or the READY light illuminates. (As washer fluid contains alcohol, splashing the fluid to a hot component may cause fire.)
- Be careful not to cover the air vent for cooling the HV battery.
- When servicing the vehicle, do not carry metal objects such as mechanical pencils or scales that can be dropped accidentally and cause a short circuit.
- Before inspecting or servicing the high-voltage system, be sure to follow safety measures, such as wearing insulated gloves and removing the service plug to prevent electrical shock.

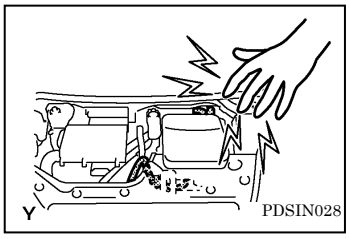

Danger of Electrical Shock

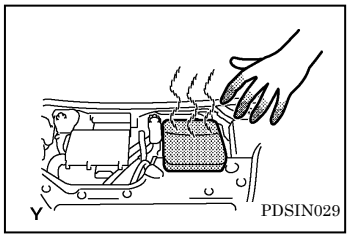

Danger of Burn

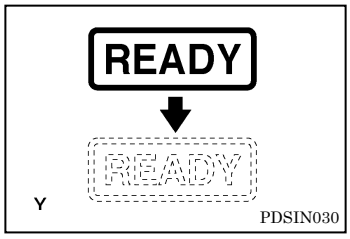

Confirmation of READY Light

L. LONG-TERM STORED VEHICLES

The quality of the vehicles stored long-term deteriorates gradually. Therefore, carry out the new vehicle inspection according to MAINTENANCE PROCEDURES FOR STORED VEHICLES.

M. REQUIRED FACILITIES/TOOLS

1. Servicing Area
   - Vehicle Washing Area

     Required Conditions
     1. A clean, paved or concrete floor
     2. Enough space that allows each door to open/close
     3. Lighting facilities that are bright enough to work
     4. A water system of good quality without adverse effects on a vehicle
     5. Drains to prevent wastewater accumulation

   - Inspection of Interior and Exterior Parts Installation

     Required Conditions
     1. A clean, paved or concrete floor
     2. Enough space that allows each door to open/close
     3. Lighting facilities with illuminance of 800 lx or more

   - Lift and Pit

     Required Conditions
     1. A lift and a pit with which you can safely check under a vehicle
     2. Lighting facilities that are bright enough to work

2. Facilities/Tools

No.	Item	Vehicle Washing	Interior and Exterior	Under Vehicle
1	Seat Covers	○	○	○
2	Floor Covers	○	○	○
3	Fender Covers		○	
4	Vehicle Washing Tools (Water Hose, Sponge, Chamois Leather, etc.)	○		
5	Vacuum Cleaner		○	
6	General Tools		○	○
7	Digital Voltmeter		○	
8	Torque Wrench (For Wheel Lug Nut)			○
9	Flash Light or Check Light		○	○
10	Mirror (For Checking Exterior Lights)		○	
11	CD, MD, Cassette, DVD		○	
12	Compressor (For Air Boost)			○
13	Tire Pressure Gauge			○
14	Intelligent Tester II (Techstream)		○	
15	Stool (Light Weight not to Damage Vehicle)	○	○	
16	Safety Items (Safety Glasses, Helmet, etc.)		○	○
17	Binder	○	○	○
18	Writing Tools		○	○
19	PRE-DELIVERY SERVICE CHECK SHEET		○	○
20	Working Gloves (For Painted Surface/Interior, Engine Compartment, Under Vehicle)		○	○
21	Shop Cloth		○	○
22	Washing Fluid	○	○	○

3. Layout Examples

- One-man Inspection Method (Suitable for a Small Number of Vehicles)
  One technician performs inspections of one vehicle.

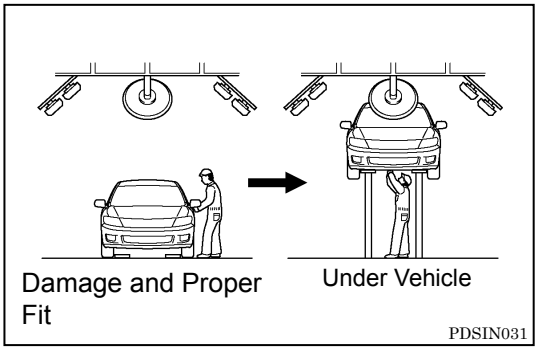

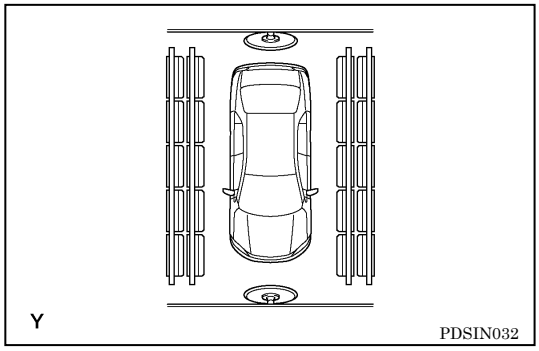

- Line Inspection Method (Suitable for a Large Number of Vehicles)
  A vehicle is divided into several inspection sections. One or more technicians are allocated to each section and perform inspections.

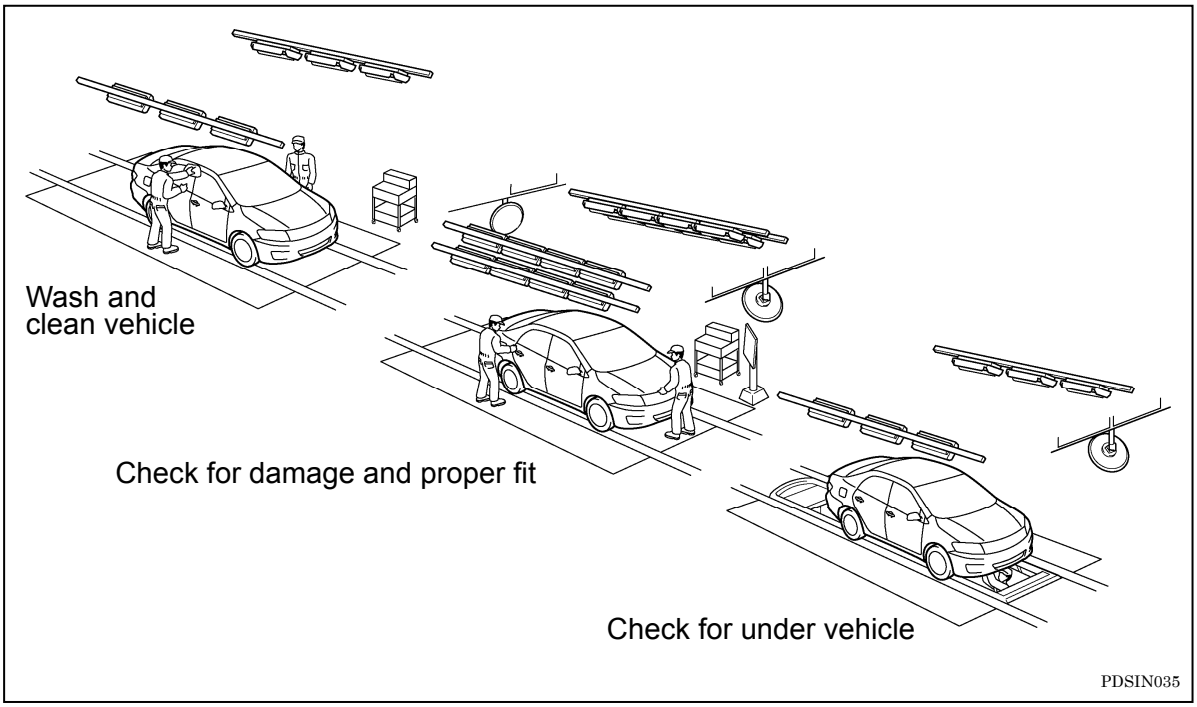

2. PDS ITEMS

		Page
A.	BEFORE INSPECTION……..……..	14
B.	VEHICLE EXTERIOR…….……..……	14
C.	ENGINE COMPARTMENT……..	15
D.	WALK-AROUND INSPECTION	
•	FRONT DOOR AND ITS SURROUNDINGS (DRIVER'S SEAT SIDE)……...…	15
•	STEERING COLUMN AND ITS SURROUNDINGS……	16
•	FRONT DOOR (DRIVER'S SEAT SIDE), COMBINATION METER AND ITS SURROUNDINGS...	16
•	CENTER CONSOLE AND ITS SURROUNDINGS…….	17
•	ROOF AND ITS SURROUNDINGS (DRIVER'S SEAT SIDE)……...	17
•	DRIVER'S SEAT AND ITS SURROUNDINGS…….	17
•	REAR DOOR AND ITS SURROUNDINGS (DRIVER'S SEAT SIDE)…….…..	18
•	LUGGAGE COMPARTMENT (DECK)……	18
•	REAR DOOR AND ITS SURROUNDINGS (FRONT PASSENGER'S SEAT SIDE)……..	18
•	FRONT DOOR AND ITS SURROUNDINGS (FRONT PASSENGER'S SEAT SIDE)……	19
E.	UNDER VEHICLE……..	20
F.	ROAD TEST……..…….	21
G.	FINAL INSPECTION…….……	21

IT

A. BEFORE INSPECTION

See Page 30

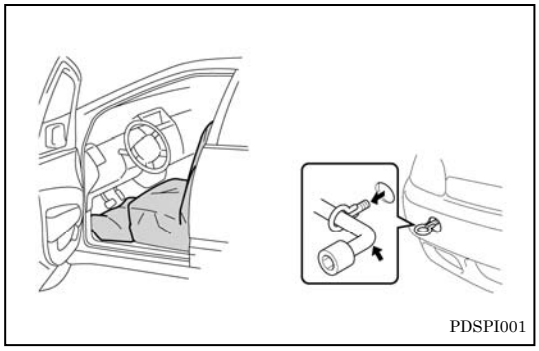

A01. Set protective covers.
A02. Remove and install factory-loaded parts.

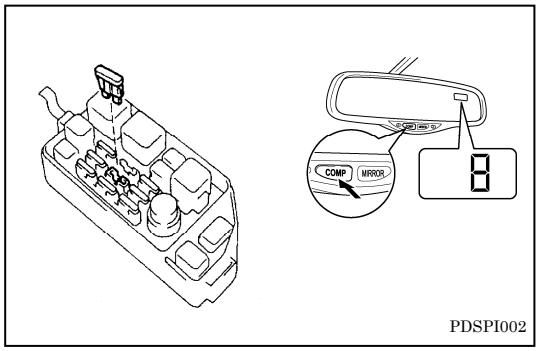

A03. Initialize and start-up electrical system*.
(Refer to the Service Bulletin of the particular model.)

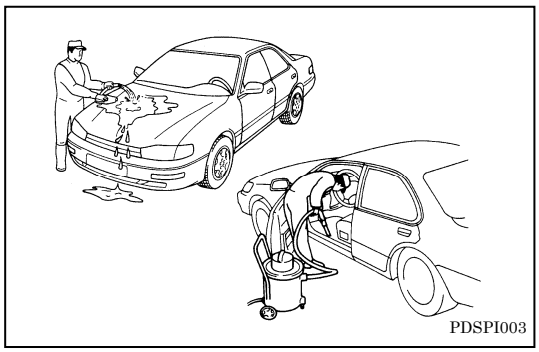

A04. Wash and clean vehicle.

B. VEHICLE EXTERIOR

See Page 32

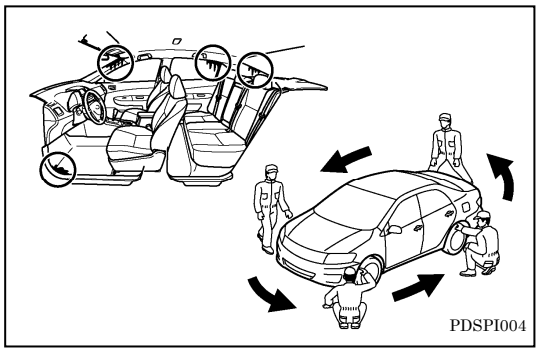

B01. Check for water leaks (cabin and luggage compartment).
B02. Check paint finish (paint defect, damage and proper fit).
B03. Check body alignment.
B04. Check exterior parts for damage and proper fit.

*: Inspect or install when equipped/required.

C. ENGINE COMPARTMENT

See Page 35

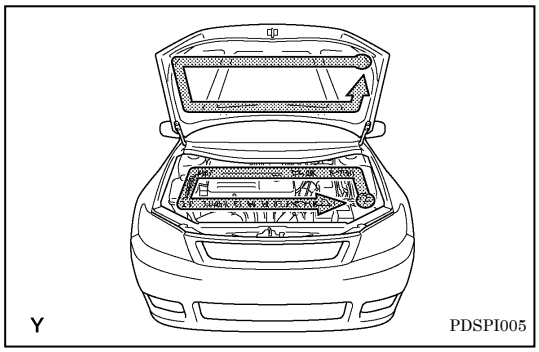

C01. Check engine hood opener and safety lock.
C02. Check battery voltage.
C03. Check for proper fit and damage.
C04. Check for fuel, oil, coolant or other fluid leaks.
C05. Check electric cooling fans.

IT

D. WALK-AROUND INSPECTION

See Page 37

Front door and its surroundings (driver's seat side)

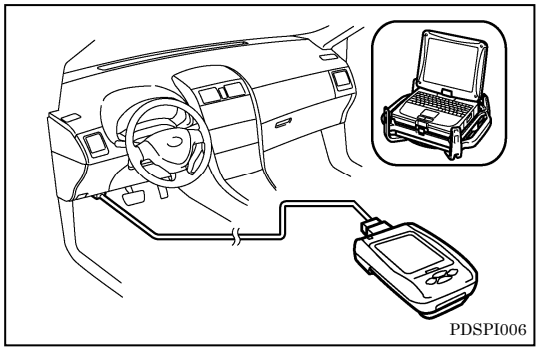

D01. Check and delete DTC (Diagnostic Trouble Code).

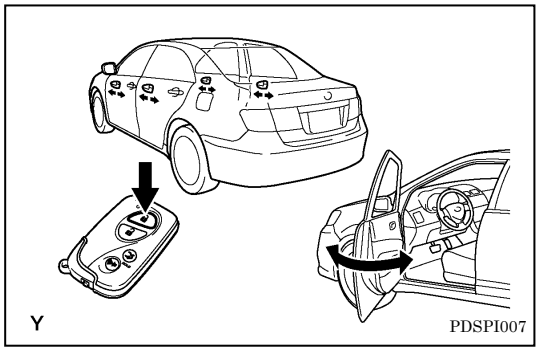

D02. Check door, door handle and door lock.
D03. Check wireless door lock remote control system.
D04. Check smart key system (smart entry and start system)*.
D05. Check theft deterrent system*.

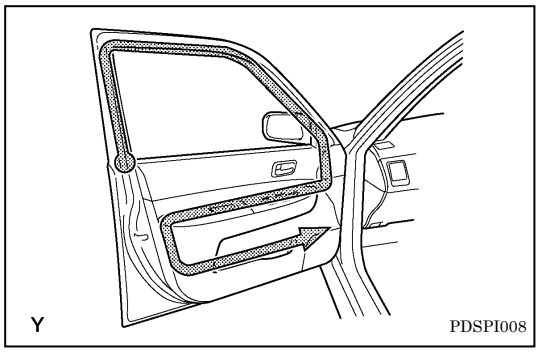

D06. Check interior parts for dirt, damage and proper fit and alignment.

*: Inspect or install when equipped/required.

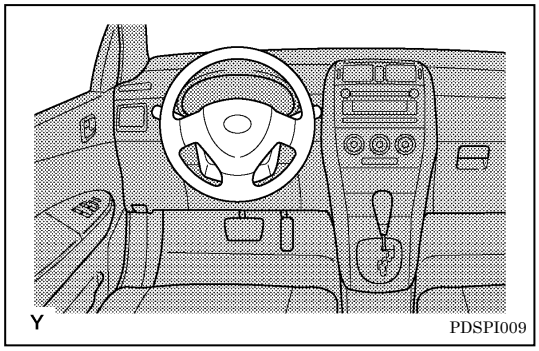

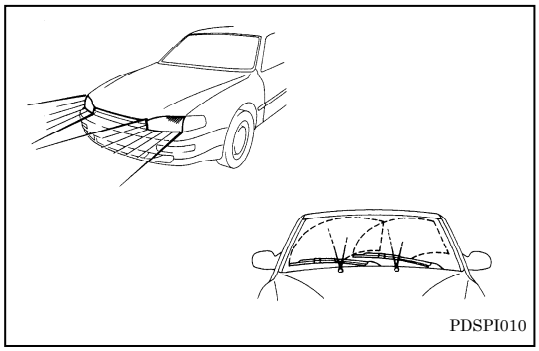

Steering column and its surroundings

D07. Check interior parts for dirt, damage and proper fit and alignment.
D08. Check horn.
D09. Check steering wheel.
D10. Check engine (HV) immobilizer system*.
D11. Check ignition (engine/power) switch.
D12. Check warning lights.
D13. Check engine (hybrid system) operation (cold).
D14. Check turn signal lights and emergency flashers.
D15. Check exterior lights.
D16. Check wipers and washers.

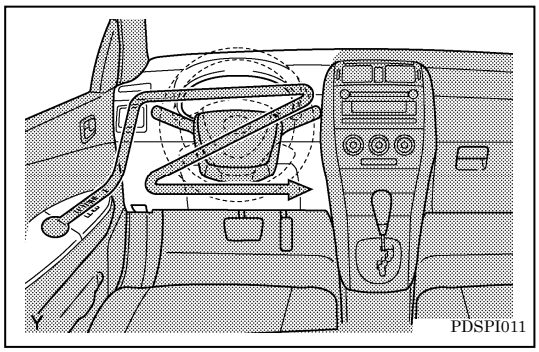

Front door (driver's seat side), combination meter and its surroundings

D17. Check window operation.
D18. Check door locks.
D19. Check interior parts for dirt, damage and proper fit and alignment.
D20. Check headlight cleaners*.
D21. Check headlight beam level control system*.
D22. Check VSC/TRAC (TRC)*.
D23. Check outside rear view mirror (remote control mirror).
D24. Check instrument panel light control.
D25. Check other items*.
D25-1. Check power heater.
D25-2. Check other electrical components.

*: Inspect or install when equipped/required.

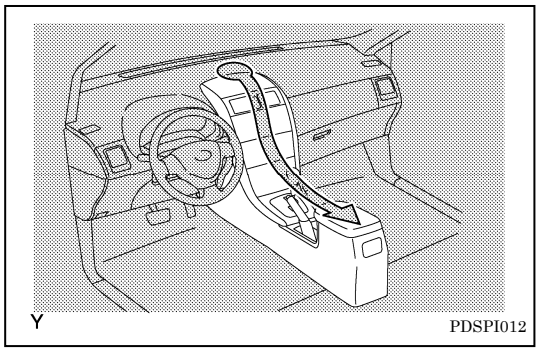

Center console and its surroundings

D26. Check interior parts for dirt, damage and proper fit and alignment.
D27. Check clock and outside temperature display.
D28. Check audio system.
D29. Check air conditioning system.
D30. Check rear window and outside rear view mirror defoggers.
D31. Check cigarette lighter and power outlet (DC 12 V, AC 115 V)*.
D32. Check shift lever.
D33. Check accessory boxes*.
D34. Check other items*.
D34-1. Check ECT (Electronically Controlled automatic Transmission/Transaxle) and hybrid mode select.
D34-2. Check night view system.
D34-3. Check rear sunshade and rear door sunshade.
D34-4. Check intuitive parking assist system (TOYOTA parking-assist system).
D34-5. Check suspension control system.

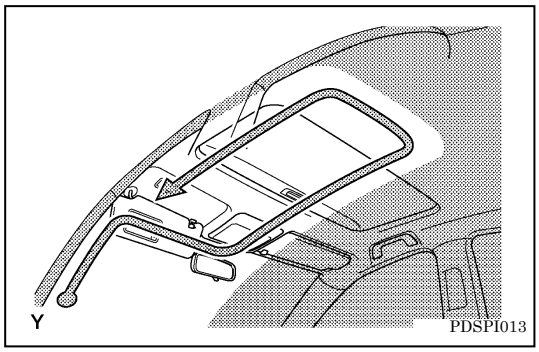

Roof and its surroundings (driver's seat side)

D35. Check interior parts for dirt, damage and proper fit and alignment.
D36. Check sun visor and vanity mirror.
D37. Check inside rear view mirror.
D38. Check sliding roof (slide and tilt)*.
D39. Check interior lights.
D40. Check other items*.
D40-1. Check garage door opener.

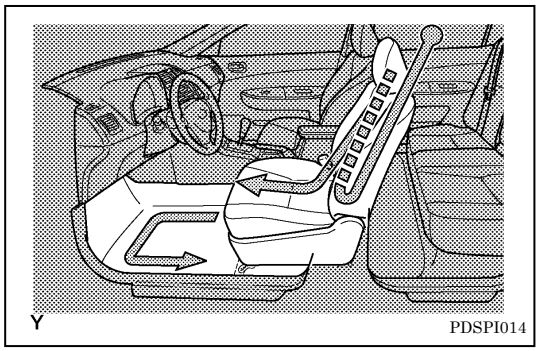

Driver's seat and its surroundings

D41. Check interior parts for dirt, damage and proper fit and alignment.
D42. Check seat belt.
D43. Check seat.
D44. Check luggage compartment door opener and fuel filler door opener.

*: Inspect or install when equipped/required.

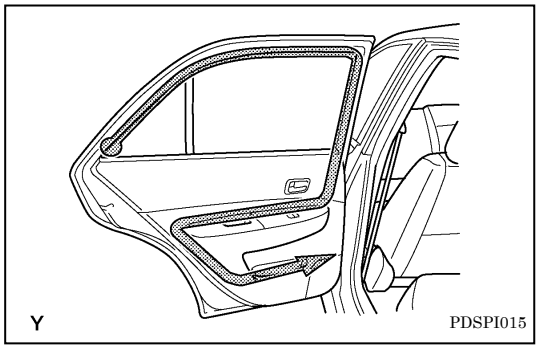

Rear door and its surroundings（driver's seat side）

D45. Check door, door handle and door lock.
D46. Check interior parts for dirt, damage and proper fit and alignment.

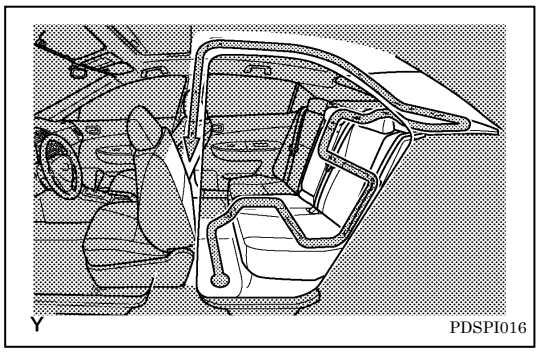

D47. Check seats (driver's side and center).
D48. Check seat belts (driver's side and center).
D49. Check accessory boxes*.

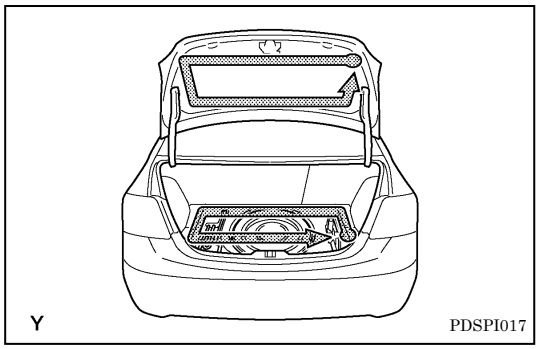

Luggage compartment (deck)

D50. Check door, door handle and door lock.
D51. Check interior parts for dirt, damage and proper fit and alignment
D52. Check for on-vehicle items in luggage compartment.
D53. Check functions in luggage compartment*.
D54. Check and adjust tire inflation pressure (all tires).

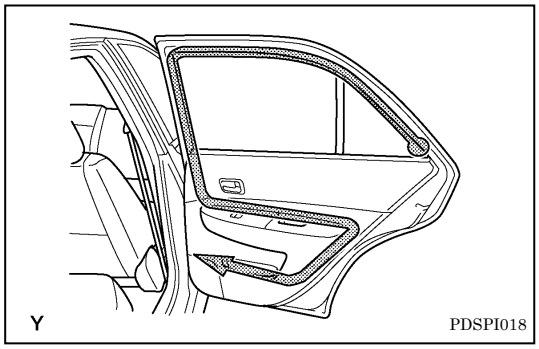

Rear door and its surroundings (front passenger's seat side)

D55. Check door, door handle and door lock.
D56. Check interior parts for dirt, damage and proper fit and alignment.

*: Inspect or install when equipped/required.

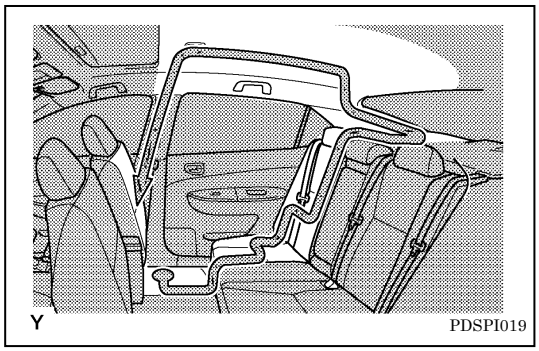

D57. Check seat.
D58. Check seat belt.
D59. Check accessory boxes*.

Front door and its surroundings
（front passenger's seat side）

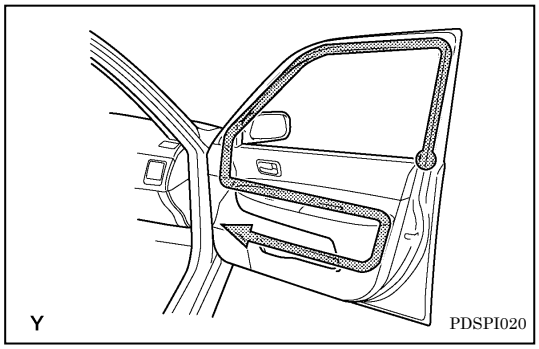

D60. Check door, door handle and door lock.
D61. Check interior parts for dirt, damage and proper fit and alignment.

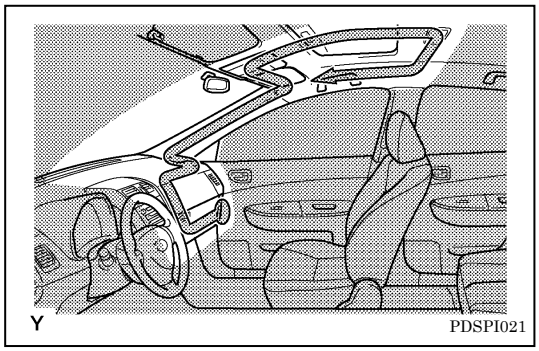

D62. Check accessory boxes*.
D63. Check sun visor and vanity mirror.
D64. Check interior lights.

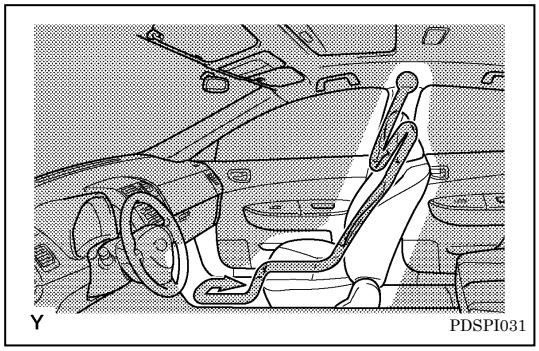

D65. Check seat belt.
D66. Check seat.

*: Inspect or install when equipped/required.

E. UNDER VEHICLE

See Page 80

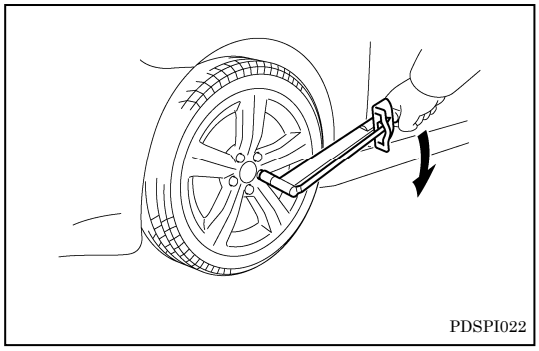

E01. Check torque of wheel lug nuts.

Lift up

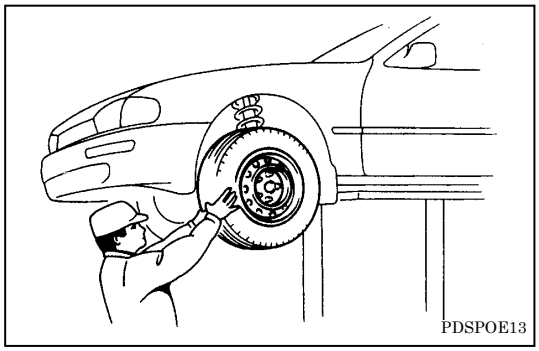

E02. Check tires for defects and damage.

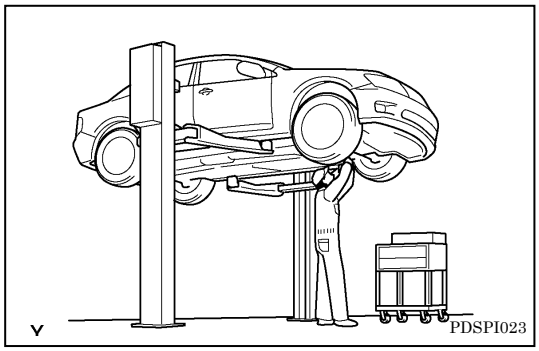

E03. Remove and install factory-loaded parts.

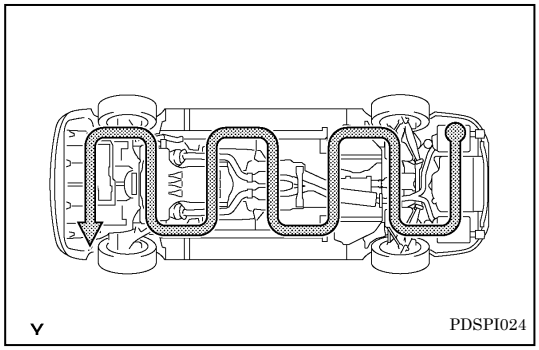

E04. Check under-vehicle parts for damage and proper tightness and fit.

E05. Check for fuel, oil, coolant or other fluid leaks.

Lower vehicle

E06. Check other items*.

E06-1. Check free wheeling hub.

*: Inspect or install when equipped/required.

F. ROAD TEST

See Page 85

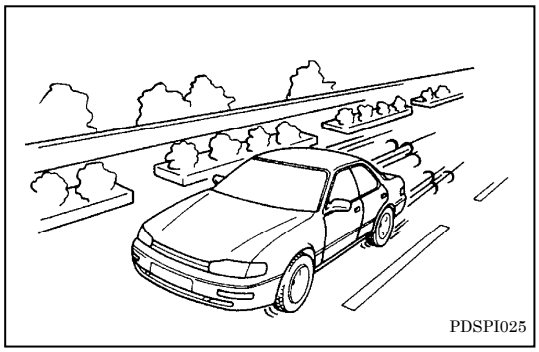
PDSPI025

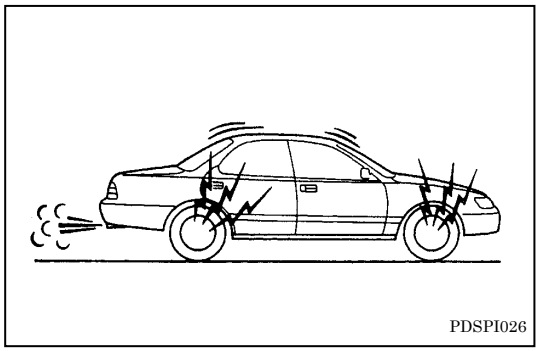
PDSPI026

F01. Check brake pedal and clutch pedal for proper height, free play and reserve distance.
F02. Check engine (hybrid system) operation.
F03. Check combination meter.
F04. Check brake, clutch and parking brake operation.
F05. Check steering operation and off-center.
F06. Check transmission/transaxle operation.
F07. Check for any abnormal noise or vibration.
F08. Check driving performance and drivability.
F09. Check heating system.
F10. Check other items*.
F10-1. Check navigation system.
F10-2. Check cruise control system.
F10-3. Check speed limiter.
F10-4. Check compass.
F10-5. Check EV drive mode.
F10-6. Check differential lock.
F10-7. Check transfer.

G. FINAL INSPECTION

See Page 96

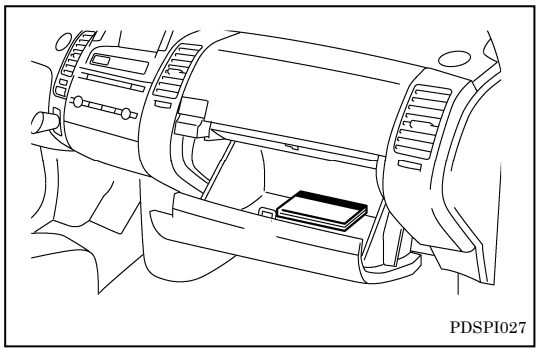
PDSPI027

G01. Preset checked items.
G02. Check for all on-vehicle items.
G03. Remove interior protective covers.

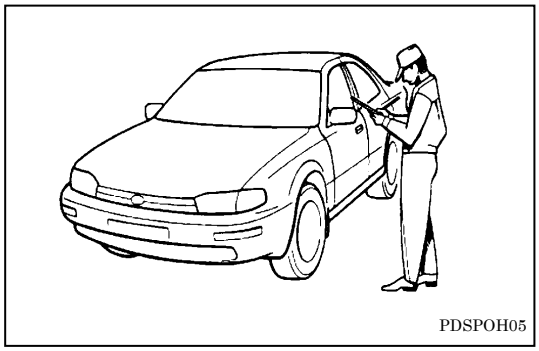
PDSPOH05

G04. Complete and sign the PDS check sheet.

*: Inspect or install when equipped/required.

-MEMO-

PRE-DELIVERY SERVICE CHECK SHEET

CHECK SHEET A

Model: _____

1. VEHICLE RECEIPT INSPECTION			
01.		Under Vehicle	Damage
02.			Fluid/oil leaks
03.		Exterior and interior	Damage
2. PRE-DELIVERY SERVICE			
A. BEFORE INSPECTION			
A01.	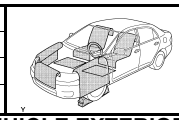		Protective covers
A02.			Factory-loaded parts
A03.			Initialize and start-up
A04.			Wash and clean vehicle
B. VEHICLE EXTERIOR			
B01.			Water leaks
B02.			Paint finish
B03.			Body alignment
B04.			Exterior parts
C. ENGINE COMPARTMENT			
C01.	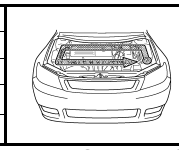		Engine hood opener and safety lock
C02.			Battery voltage
C03.			Proper fit and damage
C04.			Fuel, oil, coolant or other fluid leaks
C05.			Electric cooling fans
D. WALK-AROUND INSPECTION			
	Front Door and Its Surroundings(Driver's Seat Side)		
D01.	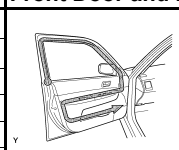		DTC (Diagnostic Trouble Code)
D02.			Door, door handle, and door lock
D03.			Wireless door lock remote control system
D04.			Smart key system
D05.			Theft deterrent system
D06.			Interior parts
	Steering Column and Its Surroundings		
D07.	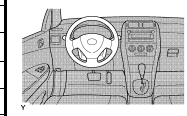		Interior parts
D08.			Horn
D09.			Steering wheel
D10.			Engine (HV) immobilizer system
D11.			Ignition (engine/power) switch
D12.			Warning lights
D13.			Engine (hybrid system) operation (cold)
D14.			Turn signal lights and emergency flashers
D15.			Exterior lights
D16.			Wipers and washers
	Front Door and Its Surroundings (Driver's Seat Side)		
D17.	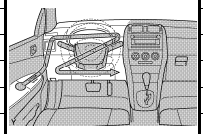		Window
D18.			Door locks
D19.			Interior parts
D20.			Headlight cleaners
D21.			Headlight beam level control system
D22.			VSC/TRAC (TRC)
D23.			Outside rear view mirror
D24.			Instrument panel light control
D25.			Other items
	Center Console and Its Surroundings		
D26.	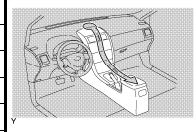		Interior parts
D27.			Clock and outside temperature display
D28.			Audio system
D29.			Air conditioning system
D30.			Defogger (rear window, rear view mirror)
D31.			Cigarette lighter and power outlet
D32.			Shift lever
D33.			Accessory box
D34.			Other items
	Roof and Its Surroundings (Driver's Seat Side)		
D35.	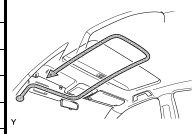		Interior parts
D36.			Sun visor and vanity mirror
D37.			Inside rear view mirror
D38.			Sliding roof
D39.			Interior lights
D40.			Other items
	Driver's Seat and Its Surroundings		
D41.	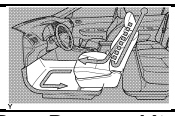		Interior parts
D42.			Seat belt
D43.			Seat
D44.			Opener (Luggage door, fuel filler door)
	Rear Door and Its Surroundings (Driver's Seat Side)		
D45.	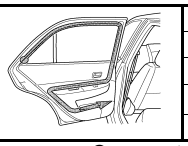		Door, door handle, and door lock
D46.			Interior parts
D47.			Seat
D48.			Seat belt
D49.			Accessory box
	Luggage Compartment (Deck)		
D50.	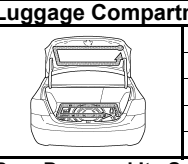		Door, door handle, and door lock
D51.			Interior parts
D52.			On-vehicle items
D53.			Function in luggage compartment
D54.			Tire inflation pressure
	Rear Door and Its Surroundings (Front Passenger's Seat Side)		
D55.	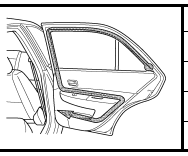		Door, door handle, and door lock
D56.			Interior parts
D57.			Seat
D58.			Seat belt
D59.			Accessory box
	Front Door and Its Surroundings (Front Passenger's Seat Side)		
D60.	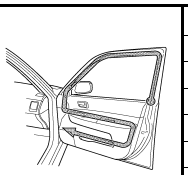		Door, door handle, and door lock
D61.			Interior parts
D62.			Accessory box
D63.			Sun visor and vanity mirror
D64.			Interior lights
D65.			Seat belt
D66.			Seat
D67.			Other items
E. UNDER VEHICLE			
E01.	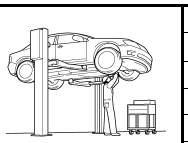		Wheel lug nut torque
E02.			Tires
E03.			Factory-loaded parts
E04.			Under-vehicle parts
E05.			Fuel, oil, coolant or other fluid leaks
E06.			Other items
F. ROAD TEST			
F01.			Brake pedal and clutch pedal
F02.			Engine (hybrid system) operation
F03.			Combination meter
F04.			Brake, clutch, and parking brake
F05.			Steering
F06.			Transmission/transaxle
F07.			Noise or vibration
F08.			Driving performance and drivability
F09.			Heating system
F10.			Other items
G. FINAL INSPECTION			
G01.			Preset
G02.			On-vehicle items
G03.			Interior protective covers
G04.			Check sheet
3. VEHICLE DELIVERY INSPECTION			
01.	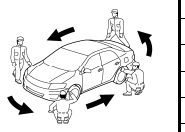		Fill up fuel tank
02.			Engine compartment
03.			Engine starting and preset
04.			Factory-loaded parts
05.			On-vehicle items
06.			Wash and clean vehicle
07.			Exterior and interior parts
08.			Final confirmation

MODEL:	VIN:	DEALER NAME:

	VEHICLE RECEIPT INSPECTION	PRE-DELIVERY SERVICE	PPO/DIO	VEHICLE DELIVERY INSPECTION
CHECK	Date / Name	Date / Name	Date / Name	Date / Name
FIX	Date / Name	Date / Name	Date / Name	Date / Name

PRE-DELIVERY SERVICE CHECK SHEET

1. EXTERIOR

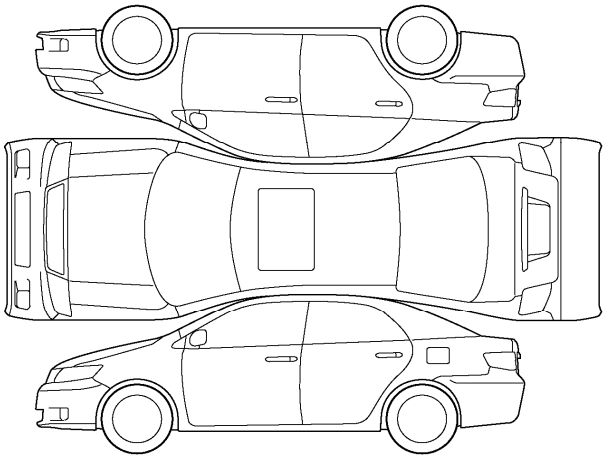

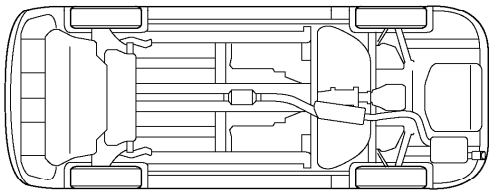

2. INTERIOR

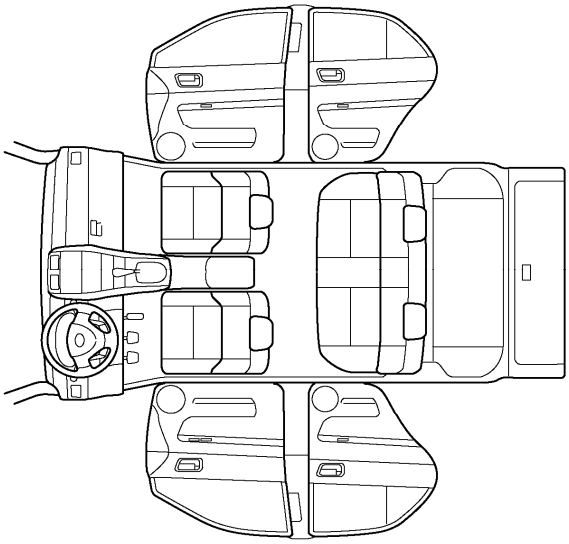

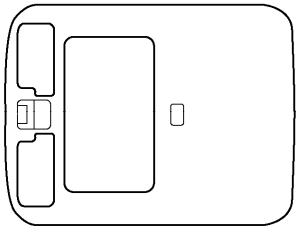

3. INSTALL FACTORY-LOADED PARTS

1		Short pin (D/C cut fuse)	6		Spoiler
2		Towing eyelet & hole cover	7		Spat
3		Rubber body plug	8		Under cover
4		License plate bracket	9		
5		Shift lock release button cover	10		

4. INITIALIZATION, ACTIVATION

1		Tire pressure warning system	6		Power seat
2		Compass	7		VGRS
3		Power door (slide, back)	8		Power window
4		Deleting diagnostic trouble code	9		Sliding roof
5		Parking assist, parking guidance	10		

PRE-DELIVERY SERVICE CHECK SHEET

1. EXTERIOR

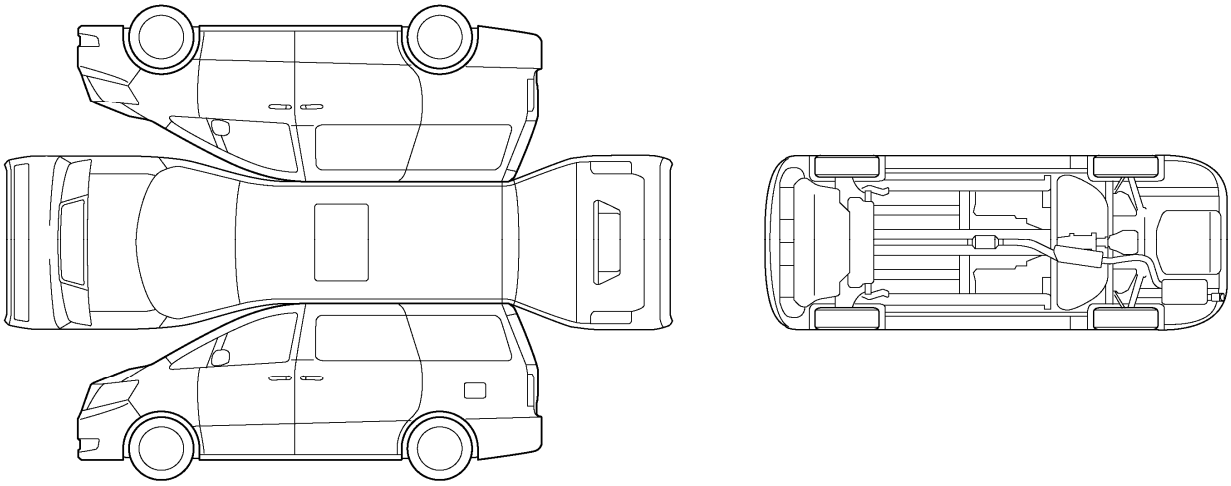

2. INTERIOR

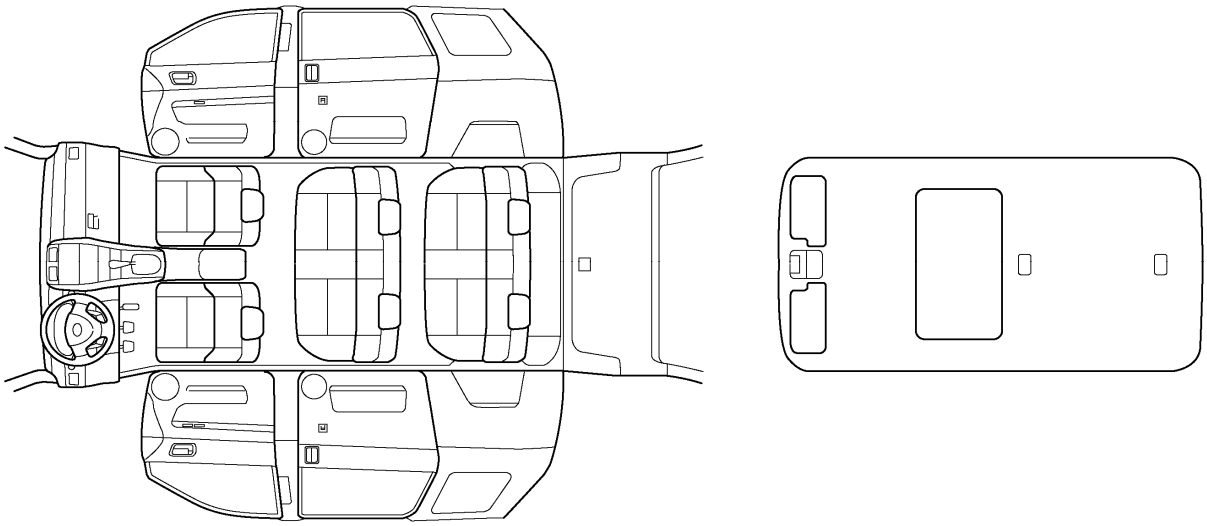

3. INSTALL FACTORY-LOADED PARTS

1		Short pin (D/C cut fuse)	6		Spoiler
2		Towing eyelet & hole cover	7		Spat
3		Rubber body plug	8		Under cover
4		License plate bracket	9		
5		Shift lock release button cover	10		

4. INITIALIZATION, ACTIVATION

1		Tire pressure warning system	6		Power seat
2		Compass	7		VGRS
3		Power door (slide, back)	8		Power window
4		Deleting diagnostic trouble code	9		Sliding roof
5		Parking assist, parking guidance	10		

PRE-DELIVERY SERVICE CHECK SHEET

1. EXTERIOR

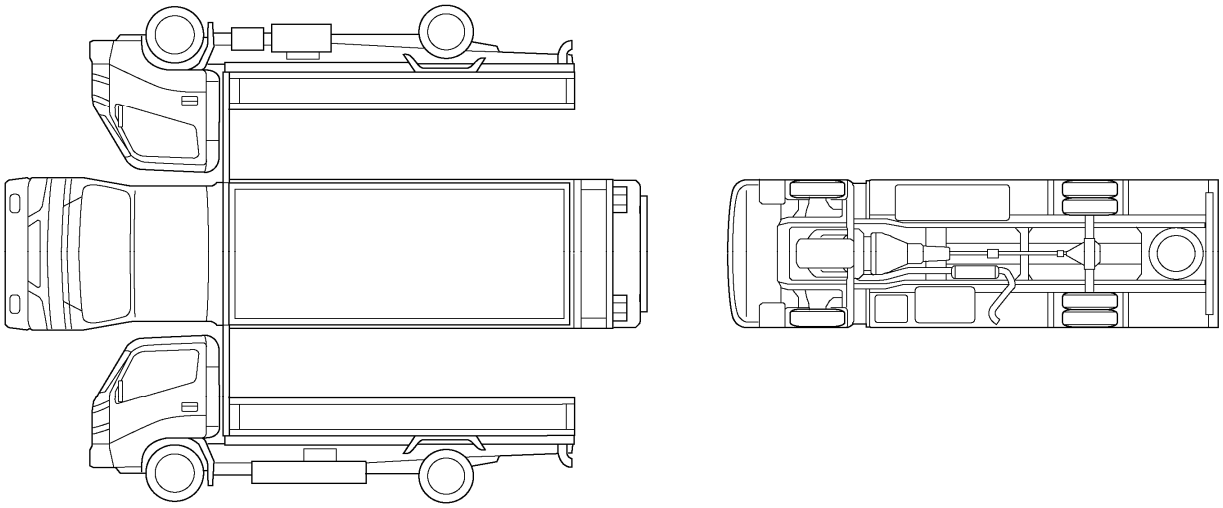

2. INTERIOR

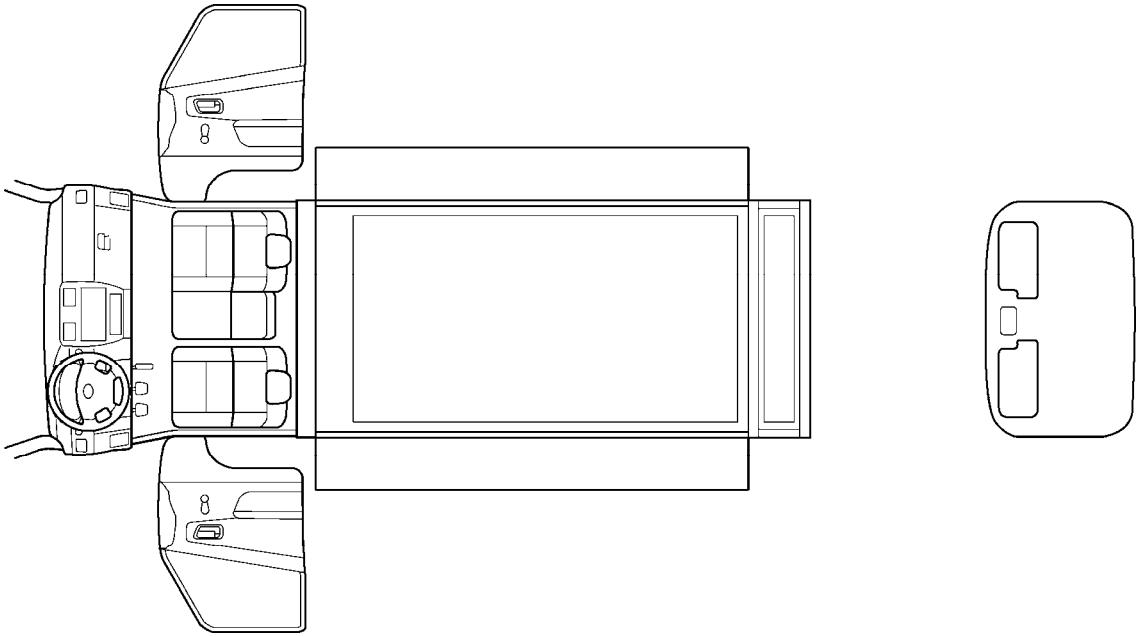

3. INSTALL FACTORY-LOADED PARTS

1		Short pin (D/C cut fuse)	6		Spoiler
2		Towing eyelet & hole cover	7		Spat
3		Rubber body plug	8		Under cover
4		License plate bracket	9		
5		Shift lock release button cover	10		

4. INITIALIZATION, ACTIVATION

1		Tire pressure warning system	6		Power seat
2		Compass	7		VGRS
3		Power door (slide, back)	8		Power window
4		Deleting diagnostic trouble code	9		Sliding roof
5		Parking assist, parking guidance	10		

-MEMO-

A. BEFORE INSPECTION

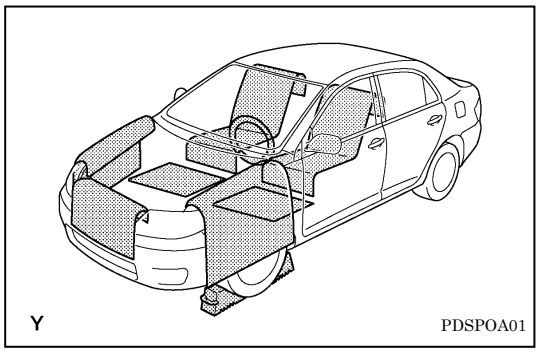

A01. SET PROTECTIVE COVERS

- Floor mat
- Seat cover
- Fender cover*
- Steering wheel cover*
- Wheel stopper*

*: The steering wheel cover and wheel stoppers are used only when necessary.
The fender covers are used only when you work on the components in the engine compartment.

A02. REMOVE AND INSTALL FACTORY-LOADED PARTS

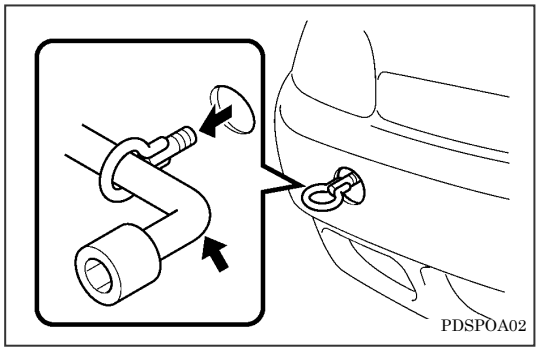

a) Remove parts:
- Body protection films
- Towing eyelets
- Unnecessary labels
- Others

HINT:
- For details on the storage space and the number of the towing outlets, refer to the Owner's Manual or Service Bulletin.
- Never remove the protective covers or disc wheel cover (film) until the vehicle delivery inspection is performed.
- Attach the under-vehicle parts when inspecting under the vehicle.

NOTICE:
The theft deterrent system may automatically lock the doors. Therefore, make sure to open the windows or take the key outside the vehicle before installing or removing the fuse (short pin).

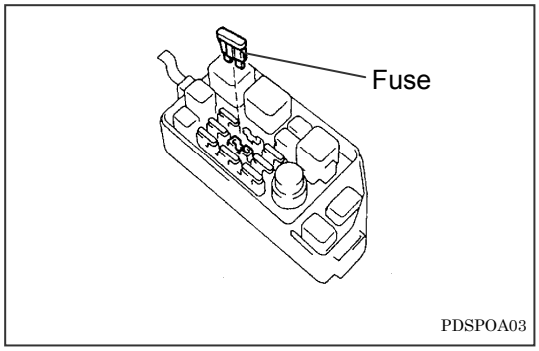

b) Install parts**
- Fuse (Short Pin)
- Towing eyelet hole covers
- Outside rear view mirror
- Roof carrier (cross bar, end cover)
- Spare wheel carrier bracket, spare tire

**: Inspect or install when equipped/required.

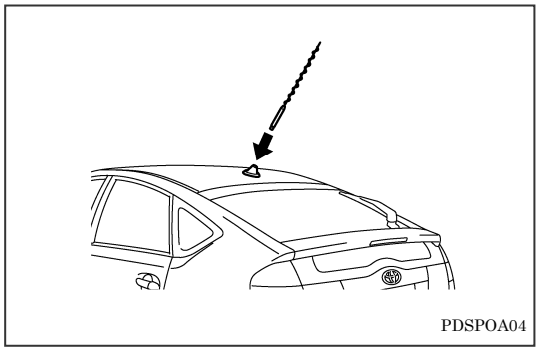

- Antenna
- License plate mounting bracket, licenese plate
- Snorkel
- Tailpipe
- Shift lock overdrive button cover (ORB cover)
- Others

A03. INITIALIZE AND START-UP ELECTRICAL SYSTEM*

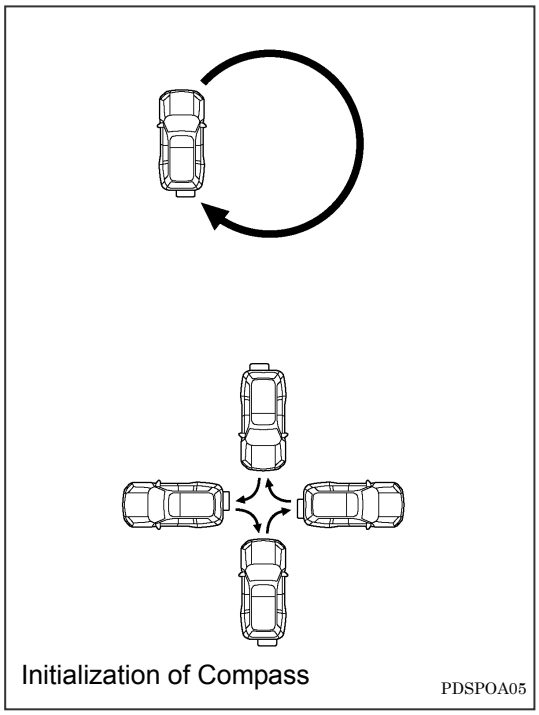

Initialization of Compass

Initialize and start up the following electrical systems according to the Service Bulletin of the particular model.

- Compass
- VGRS
- Parking assist
- Tire pressure warning system (TPWS)
  Tire pressure monitoring system (TPMS)
- Seat position memory system
- Power (sliding, back) door
- Others

A04. WASH AND CLEAN VEHICLE

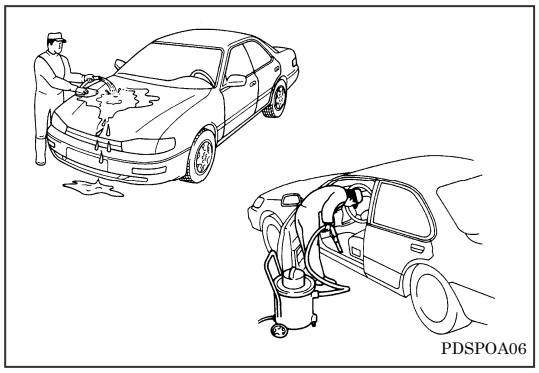

Clean the vehicle.

- Clean the cabin using a vacuum cleaner.
- Wash the vehicle and wipe it dry.

NOTICE:

- Make sure to wash your hands before performing the procedures above not to damage the vehicle when washing and wiping and not to soil the cabin when cleaning.
- We recommend that you wash and clean the vehicle by hand.

*: Inspect or install when equipped/required.

B. VEHICLE EXTERIOR

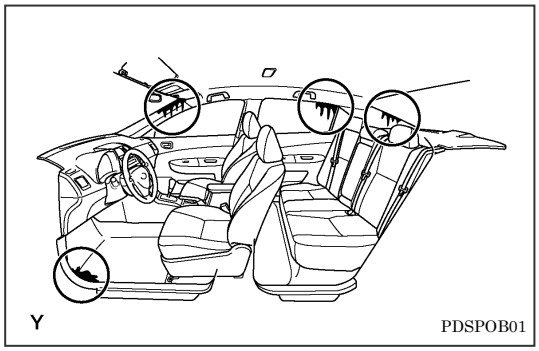

B01. CHECK FOR WATER LEAKS (CABIN AND LUGGAGE COMPARTMENT)

Visually and by hand check for water leaks from each of the following areas in the vehicle interior (make sure that the trim and floor carpet are not damp).

- Around front windshield
- Around door glasses
- Around sliding roof
- Weather strip area
- Front cowl side area
- Floor
- Inside of luggage compartment
- Other parts

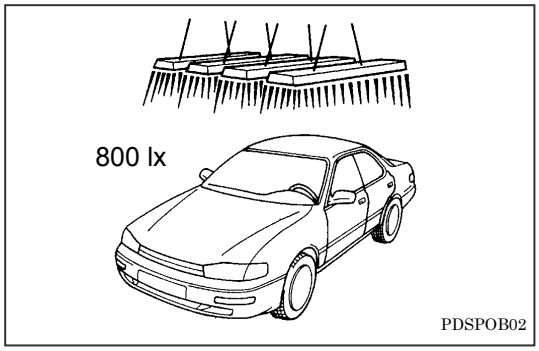

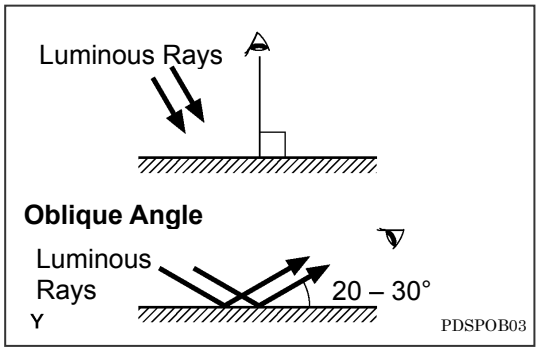

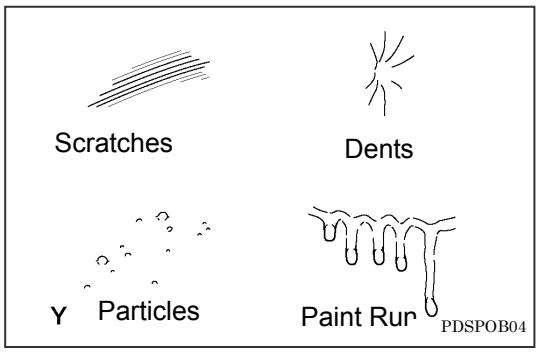

B02. CHECK PAINT FINISH (PAINT DEFECT, DAMAGE, AND PROPER FIT)

Visually and by hand check all exterior panels for surface damage caused in shipment or any abnormalities (surface rust, paint flaking, chips, dents or scratches).

- Engine hood
- Front fender
- Front and rear doors
- Roof, sliding roof
- Quarter panel
- Fuel filler door
- Luggage compartment door
- Other parts

HINT:

- Use a well-illuminated area to clearly inspect all painted surfaces. 800 lx illumination is recommended.
- Damage is found more easily by looking at an oblique angle.
- This check should be performed inconjuction with B03. BODY ALIGNMENT.

Check Procedure

1. Engine Hood

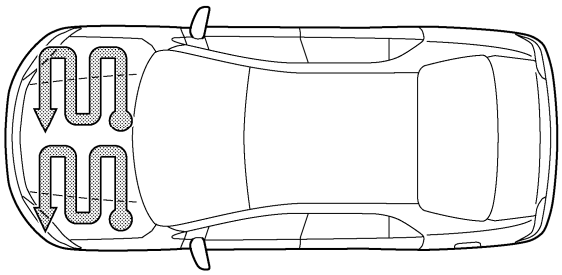

PDSPOB08

2. Front Fender and Front Door (Driver's Seat Side)

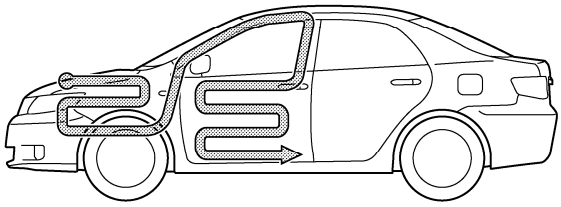

PDSPOB11

3. Roof (Driver's Seat Side)

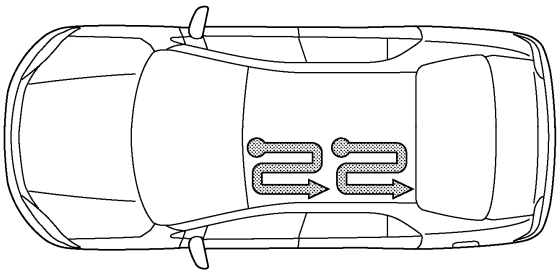

PDSPOB09

4. Rear Door, Quarter Panel and Fuel Filler Door (Driver's Seat Side)

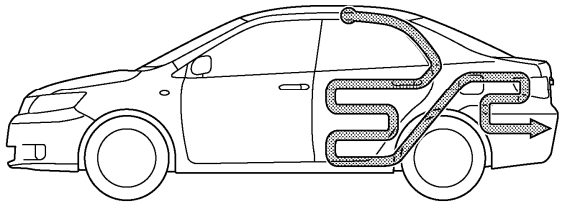

PDSPOB12

5. Luggage Compartment Door or Back Door

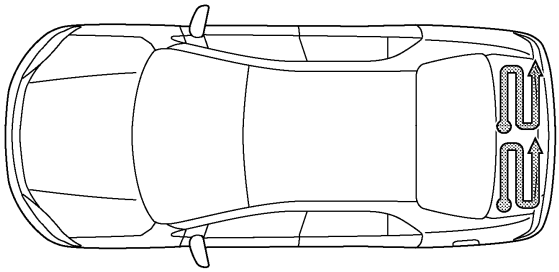

PDSPOB10

6. Rear Door, Quarter Panel and Fuel Filler Door (Passenger's Seat Side)

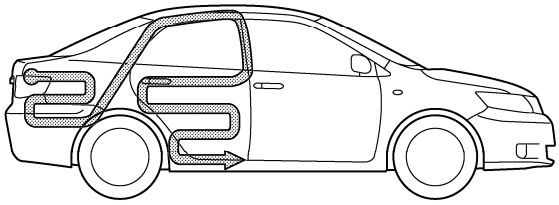

PDSPOB13

7. Roof (Passenger's Seat Side)

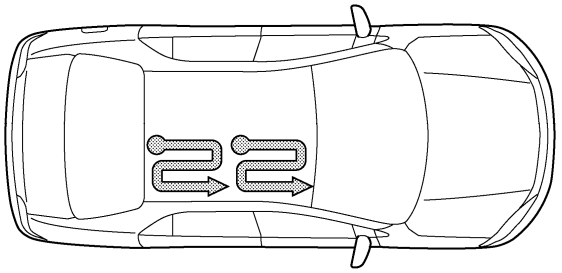

PDSPOB14

8. Front Fender and Front Door (Passenger's Seat Side)

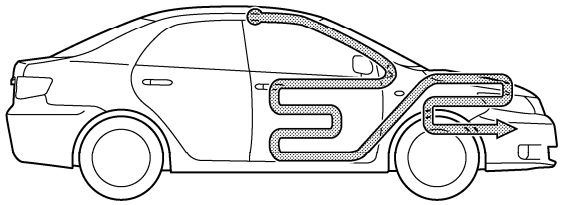

PDSPOB15

OP

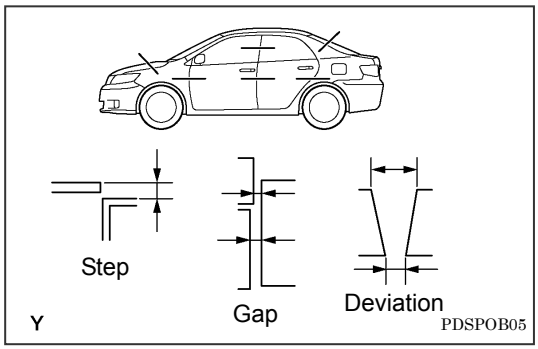

B03. CHECK BODY ALIGHNMENT

Visually and by hand check each exterior panel for a step, a gap and a deviation.

- Engine hood
- Front fender
- Front and rear doors
- Roof, sliding roof
- Quarter panel
- Fuel filler door
- Luggage compartment door
- Other parts

HINT:

This check should be performed in conjunction with B02. PAINT FINISH.

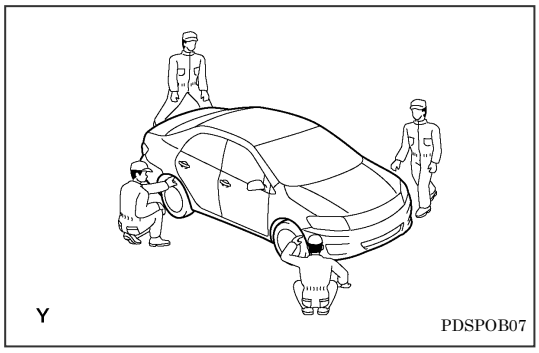

B04. CHECK EXTERIOR PARTS FOR DAMAGE AND PROPER FIT

Visually and by hand check the following parts for proper installation and fit, rust, misalignment and loose items.

- Front and rear bumpers
- Headlights, turn signal lights, clearance lights, fog lights* and taillights.
- Window moldings (front, side, rear, roof side and others)
- Window glasses, outside rear view mirrors and door handles
- Front grille, wiper arms, washer nozzles and emblem
- Sliding roof*
- Other exterior parts

HINT:

- Check each part for proper fit (looseness, separation and tilting) and damage by lightly patting and pulling the exterior parts.
- This check should be performed in conjunction with B02. PAINT FINISH.

*: Inspect or install when equipped/required.

C. ENGINE COMPARTMENT

C01. CHECK ENGINE HOOD OPENER & SAFETY LOCK

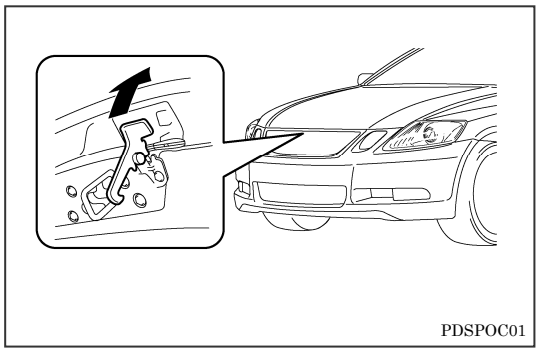

1. Raise the engine hood without operating the safety lock lever and check that the safety lock is engaged securely.
2. Operate the safety lock lever and check that the engine hood opens smoothly without engaging the safety lock.
3. Open and close the engine hood and check that the engine hood moves smoothly and that engine hood is securely supported by the hood absorber or support bar.

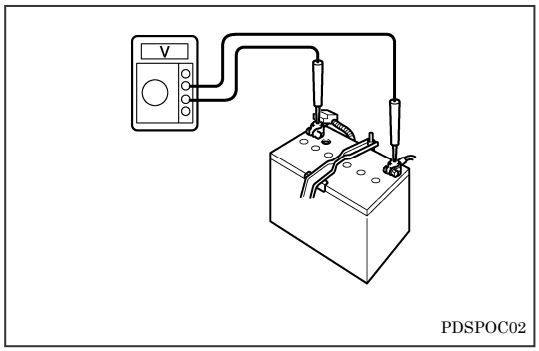

C02. CHECK BATTERY (AUXILIARY BATTERY) VOLTAGE

Using a voltmeter, measure the battery voltage. Recharge the battery if the voltage is 12.4 V or less.

NOTICE:
Before measuring the voltage, turn OFF the ignition (engine/power) switch and all electrical systems. Wait 60 seconds or more to remove the surface charge. If the engine (hybrid system) had been running before the voltage measurement, wait 20 minutes or more after the engine (hybrid system) stops to remove the surface charge.

C03. CHECK FOR PROPER FIT AND DAMAGE

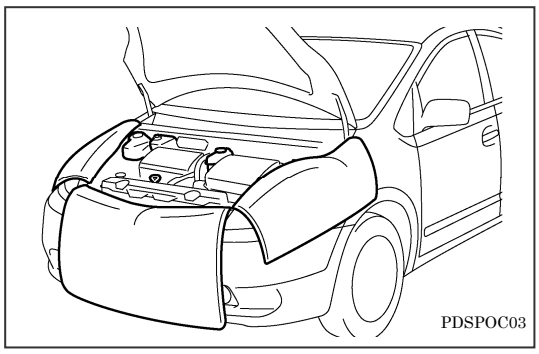

NOTICE:
When checking, use the protective covers not to damage the vehicle.

CAUTION:
- When checking, wear protective items not to get burned or injured.
- Before checking the hybrid system, confirm that the “READY” light is OFF.
- When checking the hybrid system, never touch the high-voltage parts (orange-colored).

Check the following parts for proper fit, damage and possibility of damage.
- Battery bracket
- Battery terminal
- Wire harness
- Hoses
- Other parts

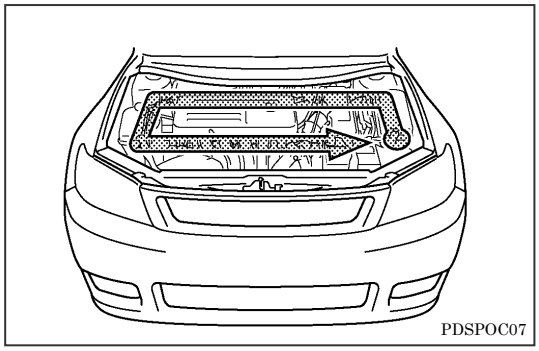

C04. CHECK FOR FUEL, OIL, COOLANT, OR OTHER FLUID LEAKS

Visually and by hand check the hoses, pipes and their connections for leaks. Also, check their oil and fluid levels.

- Coolant (engine, inverter*)
- Power steering fluid*
- Brake and clutch fluid*
- Engine oil
- Battery electrolyte
- Washer fluid
- Suspension fluid*
- Automatic transmission fluid
- Other oil or fluid

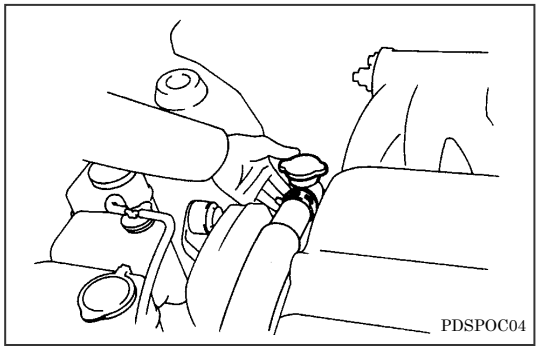

HINT:

Especially when the oil or fluid level is low, check for leaks carefully.

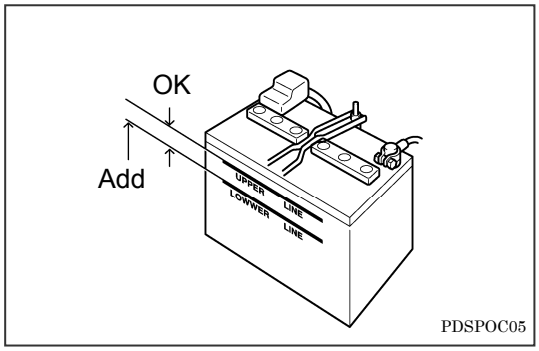

NOTICE:

- On the vehicle with the hydraulic brake, check the brake fluid after depressing the brake pedal 40 times and refilling the brake fluid to the brake fluid reservoir tank.
- Check the engine oil 5 minutes after the engine has stopped.

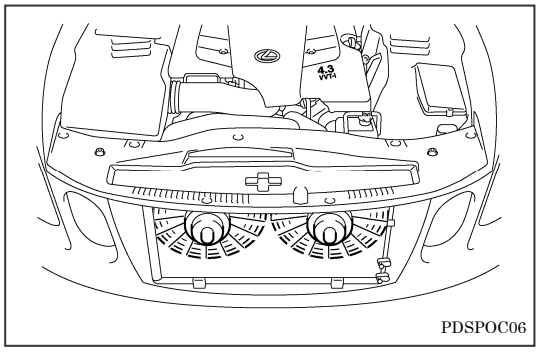

C05. CHECK ELECTRIC COOLING FANS

CAUTION:

Never touch the electric cooling fans not to get injured.

1. Check the electric cooling fans for proper operation.
2. Turn the air conditioning switch ON and check the electric cooling fans for proper operation.

*: Inspect or install when equipped/required.

D. WALK-AROUND INSPECTION

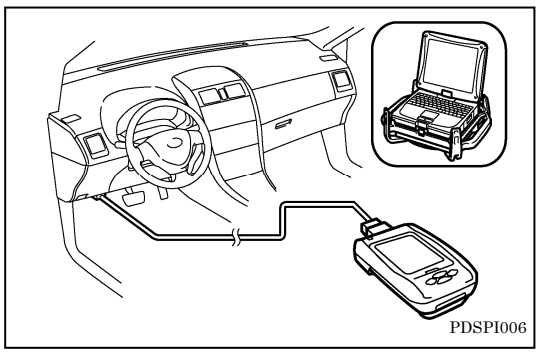

D01. CHECK AND DELETE DTC (DIAGNOSTIC TROUBLE CODE)

Check and delete the DTC (Diagnostic Trouble Code) using the intelligent tester II (Techstream).

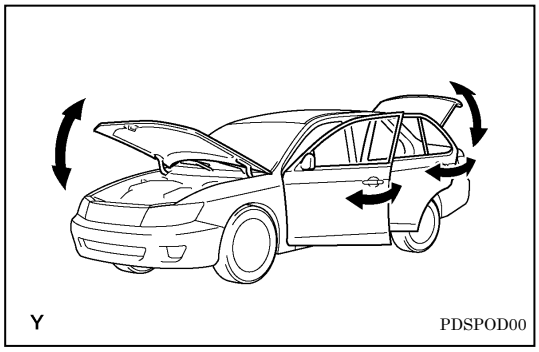

D02. CHECK DOOR, DOOR HANDLE, AND DOOR LOCK

a) Open and close operations:
Check that all the doors open and close properly.

NOTICE:
Take the key outside the vehicle before performing the check.

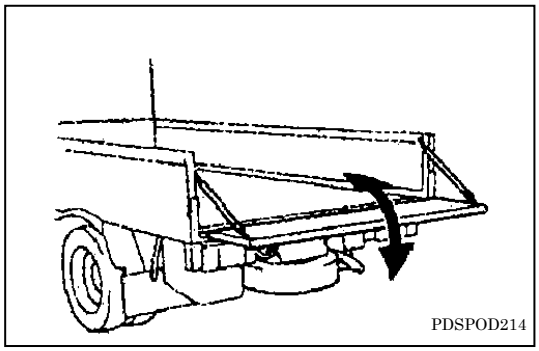

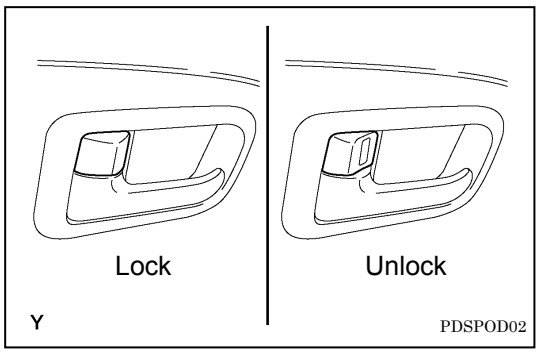

b) Inside door lock button:
- Check that the inside door lock button operates properly.
- Check that the door can be opened by using the inside door handles when the inside door lock button is in the locked position.

HINT:

In some vehicles, the driver's door is unlocked and opened by operating the inside door handle even when the inside door lock button is in the locked position.

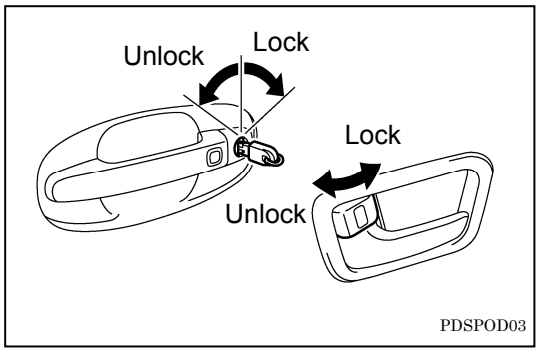

c) Key cylinder:
Insert the key into the key cylinder, lock and unlock the door and check for any troubles in the operation.

HINT:

Two-step unlock function

- Turn the key once to unlock the driver's door.
- Turn the key twice to unlock all the doors.

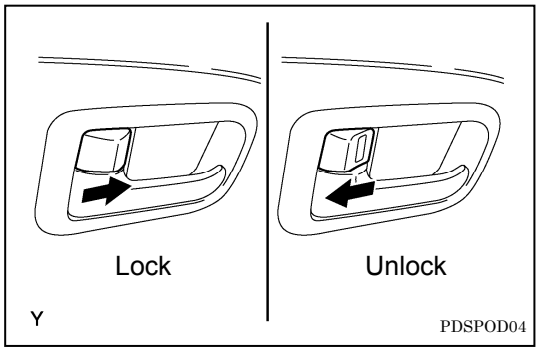

d) Double locking system*:
Set the double locking system, turn the inside door lock button to the unlocked position and check that it returns to the locked position.

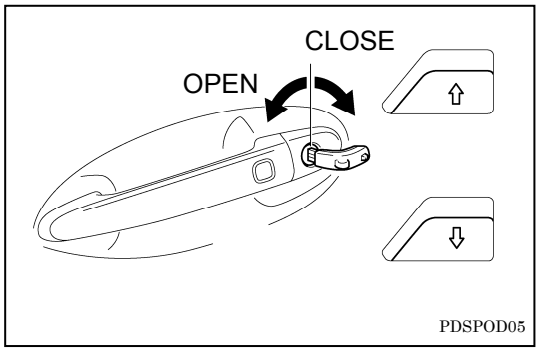

e) Door lock linked sliding roof and window open-and-close operation*:
Check the operation of the window and sliding roof from outside the vehicle.

- To close the window and sliding roof, insert the key into the door key cylinder and turn it in the locking direction.
- To open the window and sliding roof, turn the key in the unlocking direction.

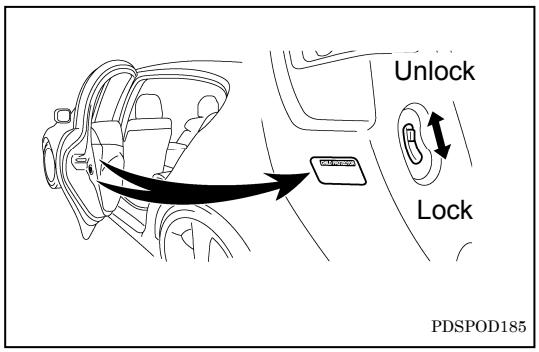

f) Child protector locks:
Check that the rear/back doors cannot be opened by the inside door handle but can be opened by the outside door handle when the child protector is in the locked position.

*: Inspect or install when equipped/required.

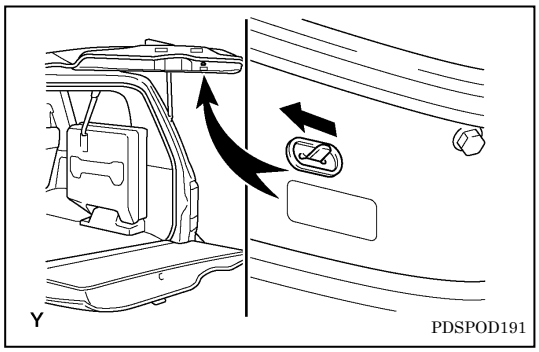

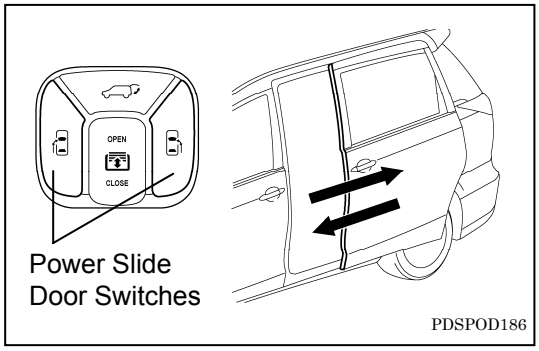

g) Power slide door*:
   1. Operate the power slide door switch and check that the slide door opens and closes properly.
   2. Check that the power slide door system does not operate when the PWR DOOR OFF switch is operated.

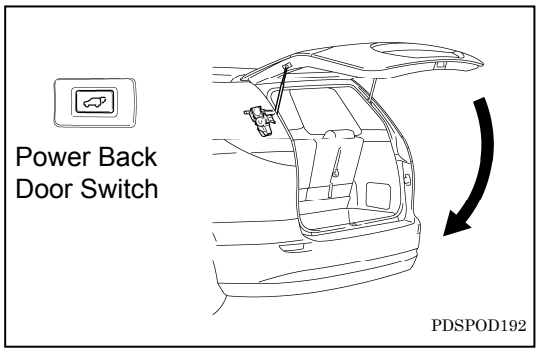

h) Power back door*:
   1. Operate the power back door switch and check that the back door closes properly.
   2. Check that the power back door system switches between ON and OFF by operating the PWR DOOR OFF switch.

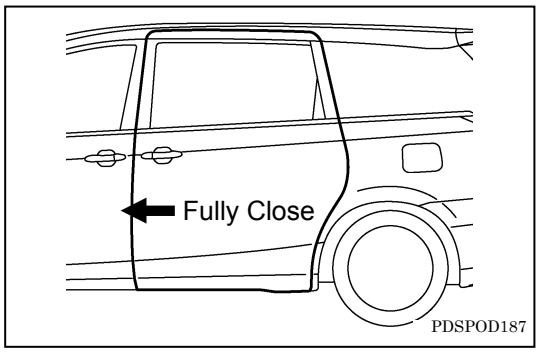

i) Door closer system*:
   1. Set the slide/back door ajar.
   2. Check that the slide/back door closes automatically to the full-closed position.

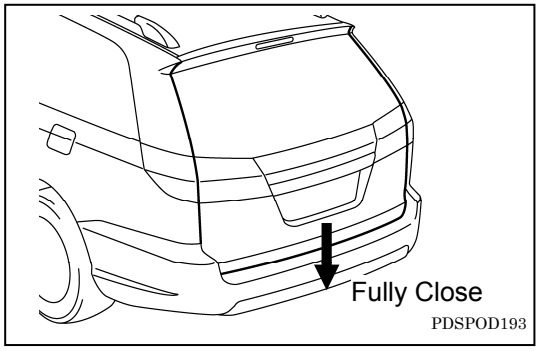

*: Inspect or install when equipped/required.

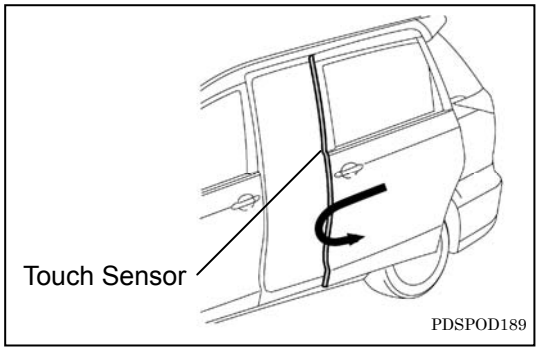

j) Jam protection function*:
Touch the touch sensor while the slide/back door is closing and check that the slide/back door stops closing and starts to open.

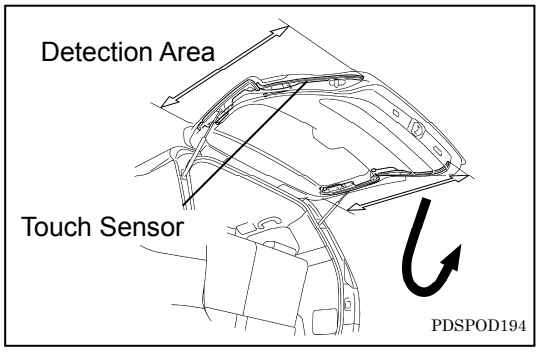

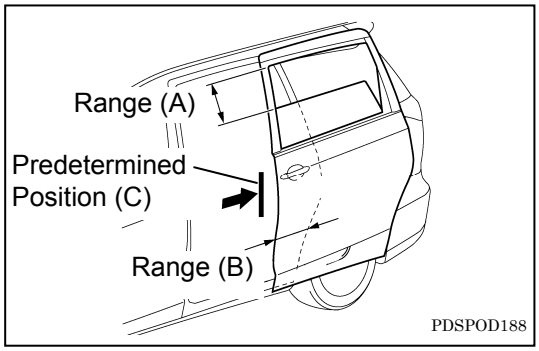

k) Operation with window open*:
1. Open the window to a posiiton in the range (A).
2. Operate the power slide door switch, open the slide door and check that the slide door stops at the predetermined position (B) and does not open to any position in the range (C).

l) Operation with fuel filler door open
(In case that the fuel filler door is on the slide door side):
1. Open the fuel filler door.
2. Operate the power slide door switch and check that the slide door does not open.

D03. CHECK WIRELESS DOOR LOCK REMOTE CONTROL SYSTEM

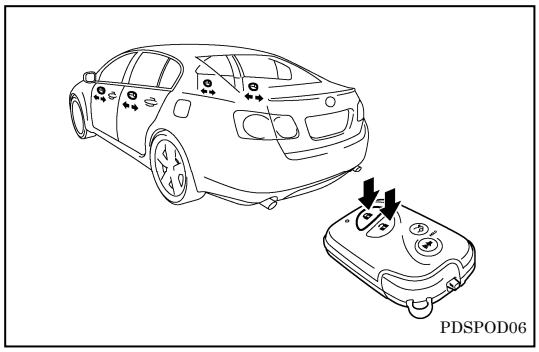

a) Open and close operations:
- Close all the doors, lock and unlock the doors using the transmitter and check for any troubles in the operation.
- Check that the answer back function operates properly when locking and unlocking the doors.

*: Inspect or install when equipped/required.

HINT:

- When any of the doors is opened, the wireless door lock remote control system does not operate or the warning buzzer sounds.
- All doors automatically relock after 30 seconds if any of the doors is not opened.

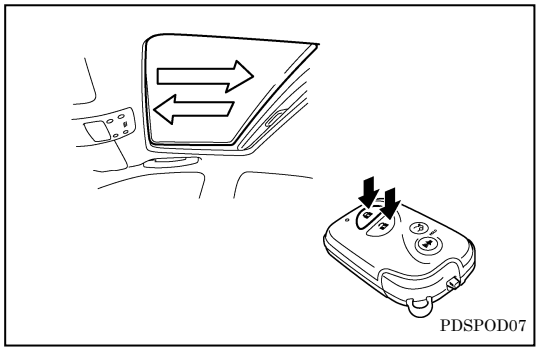

b) Transmitter-linked sliding roof and window open-and-close operation*:
Press the “UNLOCK” or “LOCK” button for 3 seconds and check that the windows and sliding roof start to move. Then, check that they stop moving when releasing the button.

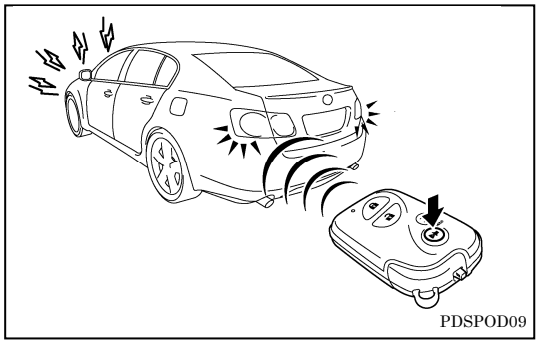

c) Panic system*:
Keep the “PANIC” button pushed for about 1 second to sound an alarm.

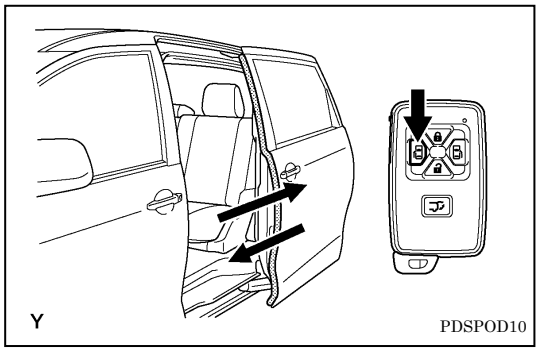

d) Power door system*:
Press the button on the transmitter to open and close the doors and check for any troubles in the operation.
- Luggage compartment door
- Power slide door
- Power back door
- Other power door

D.04 CHECK SMART KEY SYSTEM (SMART ENTRY AND START SYSTEM)*

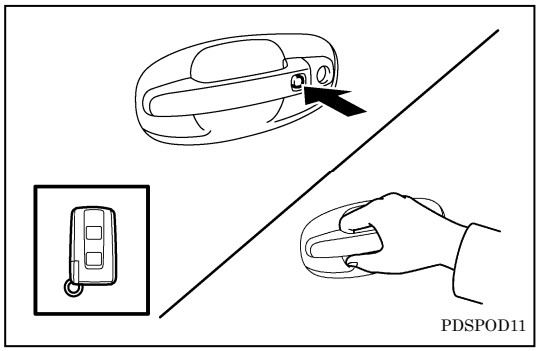

a) Lock and unlock operations
- Take the key in your possession, press the lock button on the outside door handle and check that the door locks and the answer back function operates.
- Pull each outside door handle of the right and left sides (touch the sensor on the back of the handle) and check that the door unlocks and the answer back function operates.

*: Inspect or install when equipped/required.

HINT:
The door cannot be unlocked for 3 seconds after the door is locked.

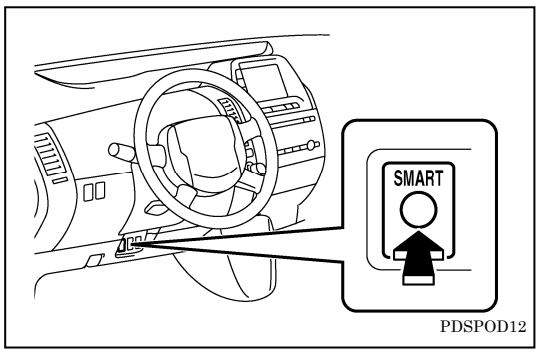

b) Smart cancel switch:
Press the smart cancel switch and check that the entry function does not operate and the smart key system warning light (smart entry and start system warning light/entry and start system warning light) illuminates.

c) Smart key system warning light
(smart entry and start system warning light/entry and start system warning light):
Check that the warning light illuminates and the buzzer sounds under the following conditions.
1. Power supply mode is "ON (ACC)" or "OFF".
2. Driver door is opened.

D05. CHECK THEFT DETERRENT SYSTEM*

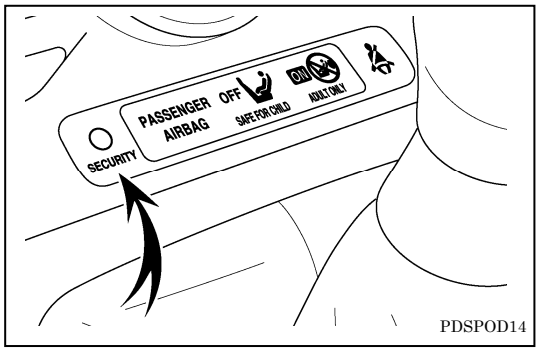

NOTICE:
Before checking, open the window of the driver's seat side.

HINT:
The theft deterrent system does not operate unless the doors, engine hood and luggage compartment door are locked.

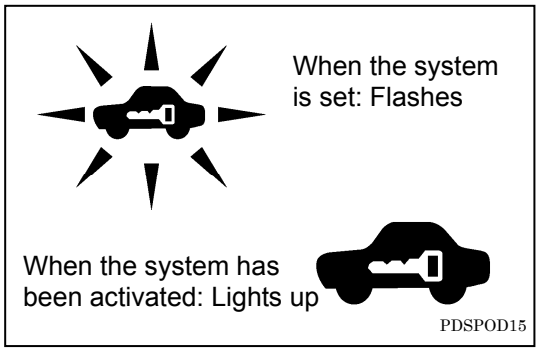

a) With intrusion sensor:
1. Lock all the doors using the transmitter.
2. Check that the indicator light changes from being ON to flashing when the theft deterrent system is set.
3. Put your hand in a cabin near the intrusion sensor and check that the theft deterrent system activates the alarm (sounding of the horn, blinking of the headlights, taillights and emergency flasher and illumination of the interior lights) and all the doors lock at the same time.

*: Inspect or install when equipped/required.

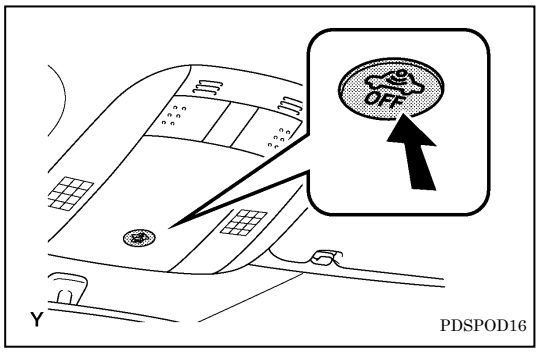

4. Unlock the doors using the transmitter to deactivate the theft deterrent system.
5. Press the intrusion sensor “OFF” switch and check that the indicator light flashes quickly.
6. Lock all the doors using the transmitter.
7. Check that the indicator light changes from being ON to flashing when the theft deterrent system is set.

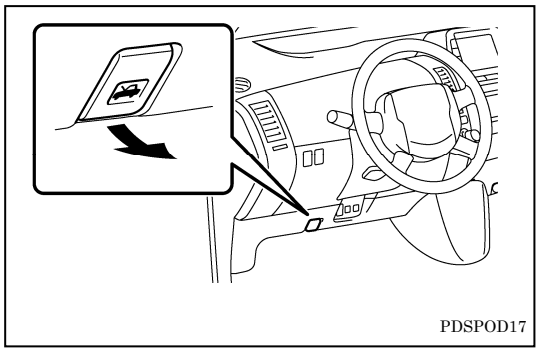

8. Unlock the engine hood and check that the theft deterrent system activates the alarm (sounding of the horn, blinking of the headlights, taillights and emergency flasher and illumination of the interior lights) and all the doors lock at the same time.
9. Unlock the doors using the transmitter to deactivate the theft deterrent system.

b) Without intrusion sensor:
   1. Lock all the doors using the transmitter.
   2. Check that the indicator light changes from being ON to flashing when the theft deterrent system is set.
   3. Unlock the engine hood and check that the theft deterrent system activates the alarm (sounding of the horn, blinking of the headlights, taillights and emergency flasher and illumination of the interior lights) and all the doors lock at the same time.
   4. Unlock the doors using the transmitter to deactivate the theft deterrent system.

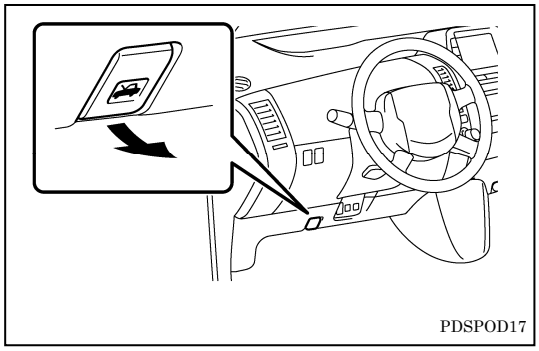

D06. CHECK INTERIOR PARTS FOR DIRT, DAMAGE, AND PROPER FIT AND ALIGNMENT

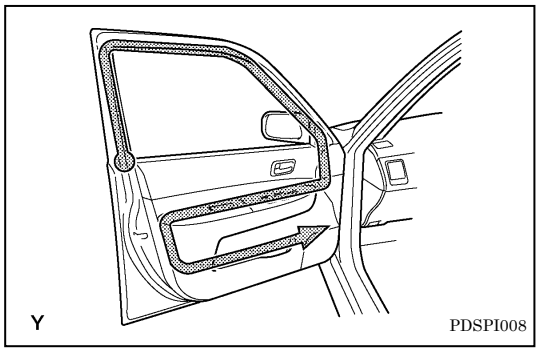

a) Front door and its surroundings (driver’s seat side)
   - Door weather strip
   - Door trim
   - Door handle
   - Door switch base
   - Other parts

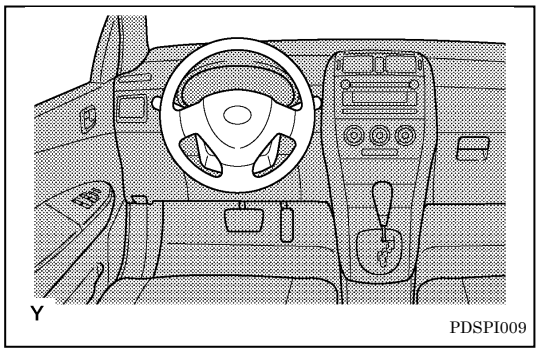

b) Steering column and its surroundings
- Steering wheel
- Steering column
- Other parts

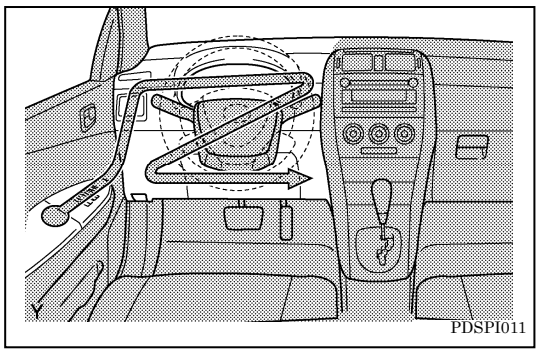

c) Front door (driver's seat side), combination meter and its surroundings
- Dashboard
- Instrument panel (upper and lower)
- Combination meter
- Other parts

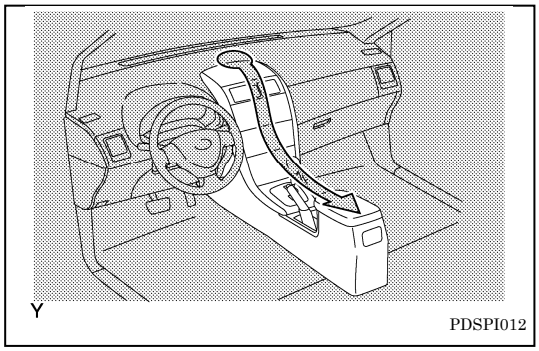

d) Center console and its surroundings
- Center console
- Panel (audio, air conditoning, shift)
- Boxes
- Other parts

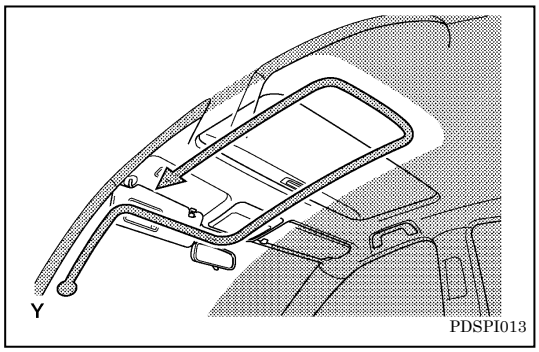

e) Roof and its surroundings (driver's seat side)
- Front pillar garnish
- Sun visor
- Inside rear view mirror
- Roof headlining
- Other parts

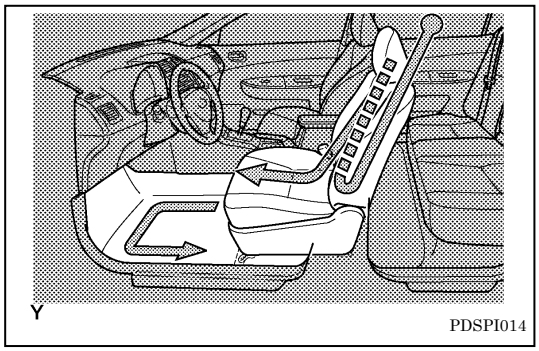

f) Driver's seat and its surroundings
- Center pillar garnish
- Seat belt
- Seat
- Floor carpet
- Other parts

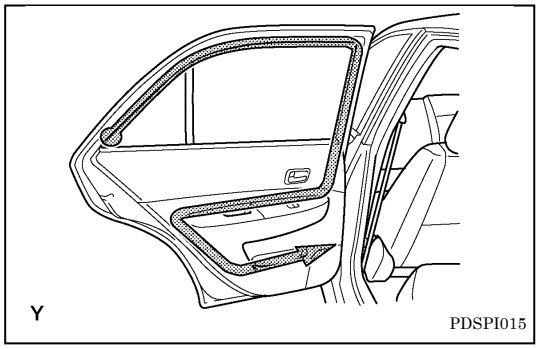

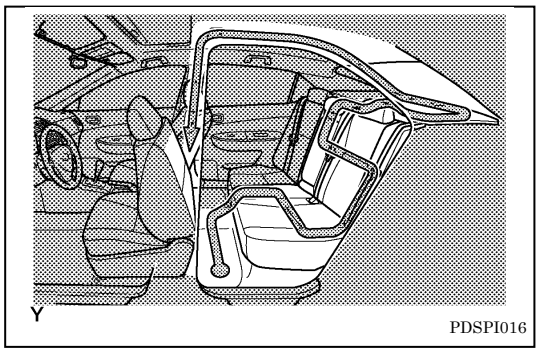

g) Rear door and its surroundings (driver's seat side)
- Door weather strip
- Door trim
- Door handle
- Door switch base
- Floor carpet
- Seat
- Seat belt
- Package tray
- Garnish
- Roof headlining
- Other parts

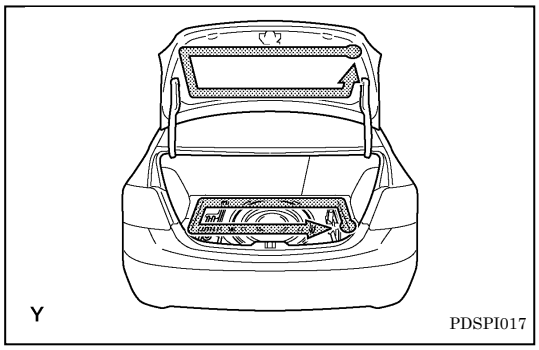

h) Luggage compartment (deck)
- Inner garnish
- Luggage cover/mat
- Other parts

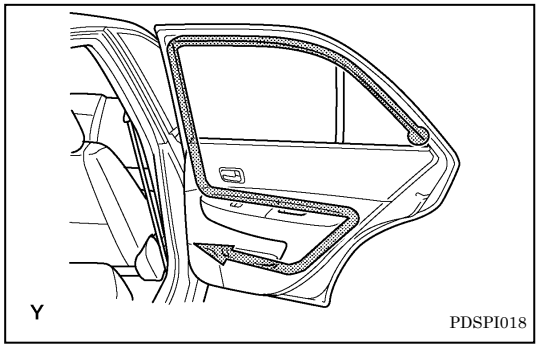

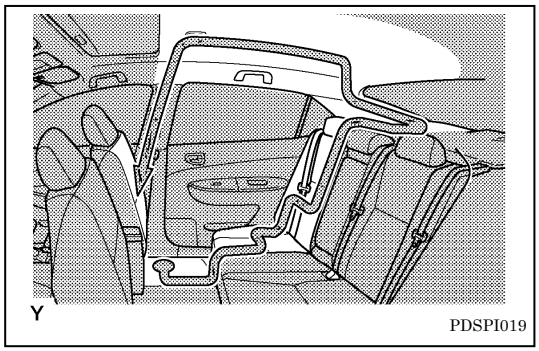

i) Rear door and its surroundings (front passenger's seat side)
- Door weather strip
- Door trim
- Door handle
- Door switch base
- Floor carpet
- Seat
- Seat belt
- Package tray
- Garnish
- Roof headlining
- Other parts

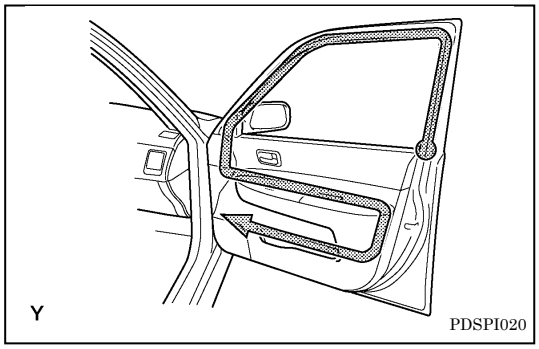

j) Front door and its surroundings
（front passenger's seat side）
- Door weather strip
- Door trim
- Door handle
- Door switch base

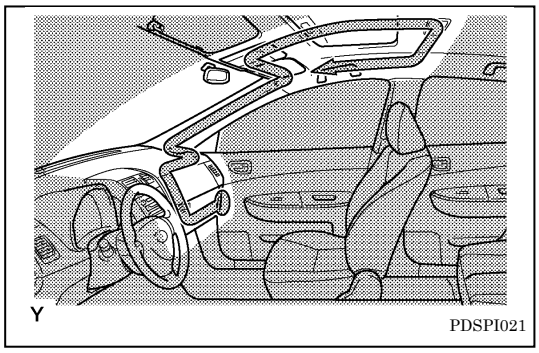

- Glove box
- Dashboad
- Front pillar garnish
- Sun visor
- Roof headlining

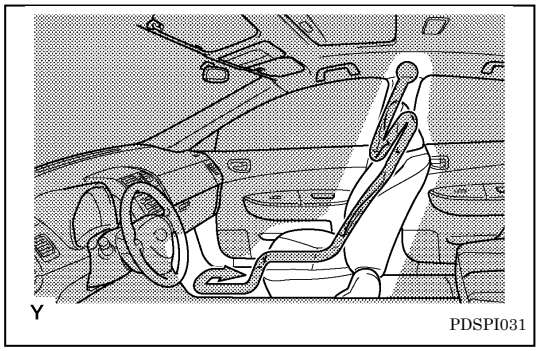

- Center pillar garnish
- Seat belt
- Seat
- Floor carpet
- Other parts

D07. CHECK INTERIOR PARTS FOR DIRT, DAMAGE AND PROPER FIT AND ALIGNMENT

► See page 43 (D06.).

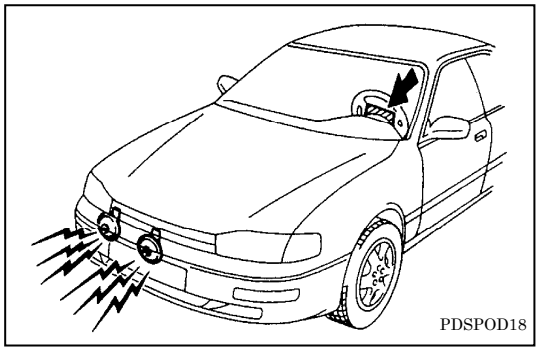

D08. CHECK HORN

Check that the horn sounds when the horn button is depressed.

D09. CHECK STEERING WHEEL

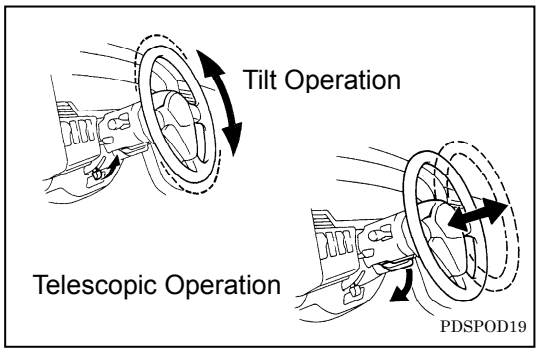

a) Manual type tilt and telescopic steering wheel: Unlock the lock lever and check that the steering wheel can be smoothly adjusted forward/backward and up/down and securely locks in each position.

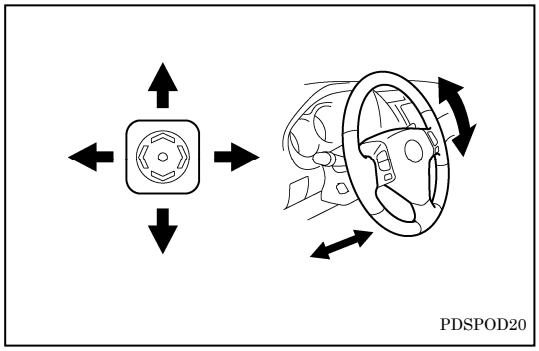

b) Power type tilt and telescopic steering wheel:
- Check that the steering wheel can be smoothly adjusted forward/backward and up/down to the desired position by operating the tilt and telescopic steering control switch.

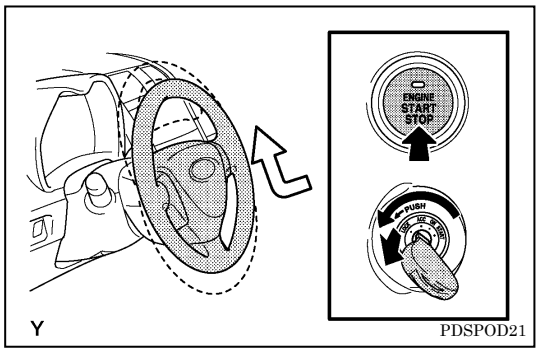

- Turn the ignition (engine/power) switch OFF and check that the steering column moves forward away from the driver and also tilts up.
- Turn the ignition (engine/power) switch ON (IG) and check that the steering column returns to the previously set position.

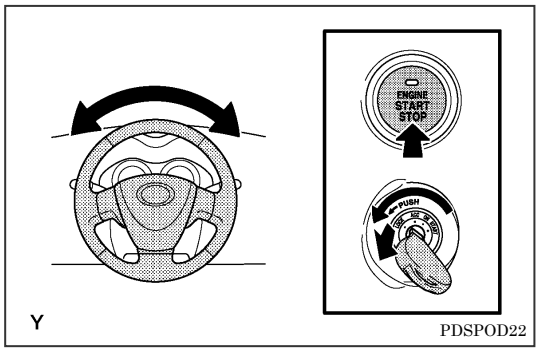

c) Steering lock system:
1. Operate the steering wheel with the ignition (engine/power) switch OFF and remove the key from key cylinder and check that the steering lock system activates.
2. After confirming that the steering wheel is locked, move the steering wheel up/down and right/left to check for proper fit.
3. Turn the ignition (engine/power) switch ON and check that the steering lock system deactivates.

D10 CHECK ENGINE (HV) IMMOBILIZER SYSTEM*

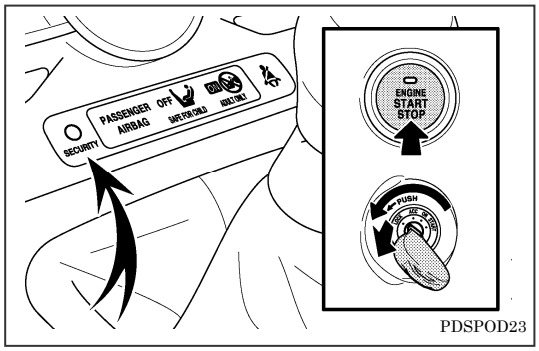

PDSPOD23

1. While the key is not inserted into the key cylinder (the engine/power switch is OFF), check that the “SECURITY” indicator light blinks.
2. Insert the key into the key cylinder (turn the engine/power switch ON [IG]) and check that the “SECURITY” indicator light turns OFF.

D11. CHECK IGNITION (ENGINE/POWER) SWITCH

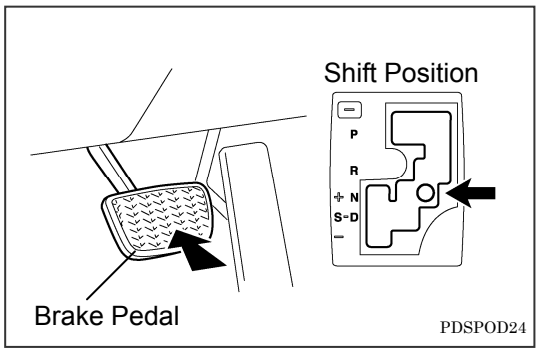

PDSPOD24

a) Ignition switch:
   1. Apply the parking brake and confirm that the shift lever is in the “P”or “N” position.

HINT:
On the vehicle with the multi-mode manual transmission, move the shift lever to the “N” position.

   2. Depress the brake pedal*[1] or clutch pedal*[2].
      *[1]: Vehicle with the automatic transmission or multi-mode manual/automatic transmission
      *[2]: Vehicle with the manual transmission
   3. Turn the key to the “ON” position and check that the electrical components are ON by the illumination of each warning light in the combination meter.
   4. Turn the key from the “ON” position to the “START” position and check that the engine starter operates.

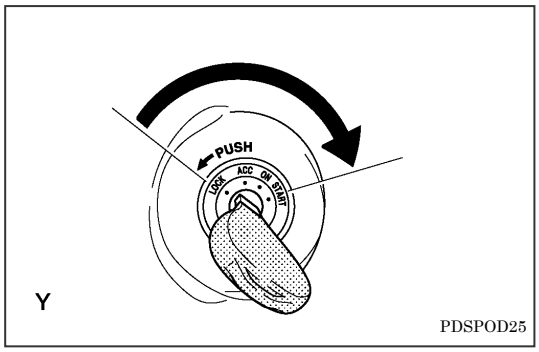

PDSPOD25

*: Inspect or install when equipped/required.

b) Engine (power) switch:
   1. Carry the key in the vehicle and apply the parking brake.
      (Key slot type: Make sure the key is fully inserted into the key slot.)
   2. Without depressing the brake pedal, press the engine (power) switch. Check for the power supply mode changeover and the indicator light illumination.
      - Pressed once (from OFF mode):
        Power supply mode is in the ON (ACC) mode.
      - Pressed twice (from OFF mode):
        Power supply mode is in the ON (IG) mode.
      - Pressed three times (from OFF mode):
        Power supply mode is in the OFF mode.
   3. Press the engine (power) switch while depressing the brake pedal and check that the engine (hybrid system) starts.

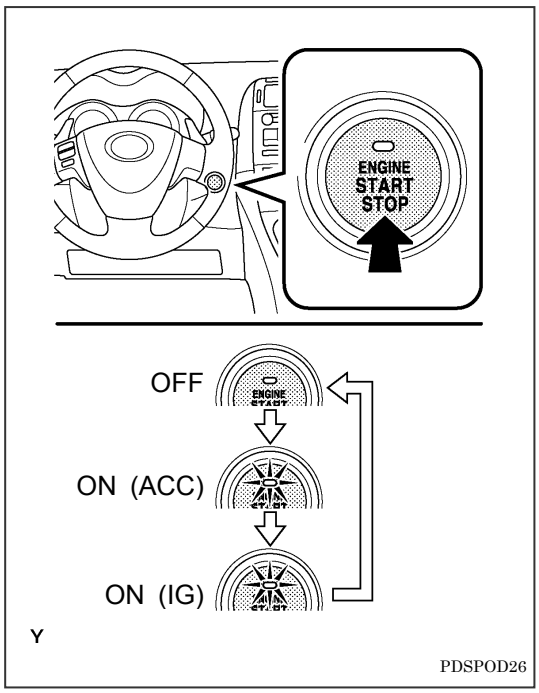

c) Transmission operation:
   - Vehicle with automatic transmission:
     Check that the engine (hybrid system) does not start when the shift lever is in any position other than "P" or “N”.

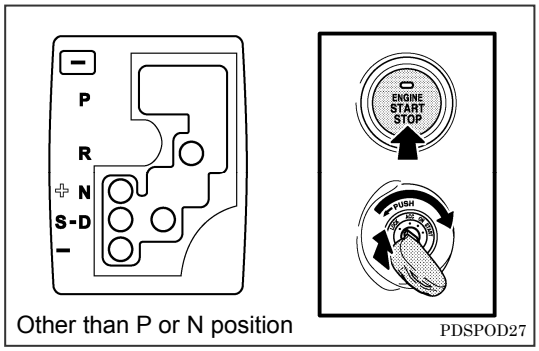

HINT:
On the hybrid vehicle, the hybrid system does not start with the shift lever in the “N” position.

   - Vehicle with manual transmission:
     Check that the engine does not start while the clutch pedal is not depressed.
     Press the cancel switch and check that the warning light illuminates and the engine starts without depressing the clutch pedal.

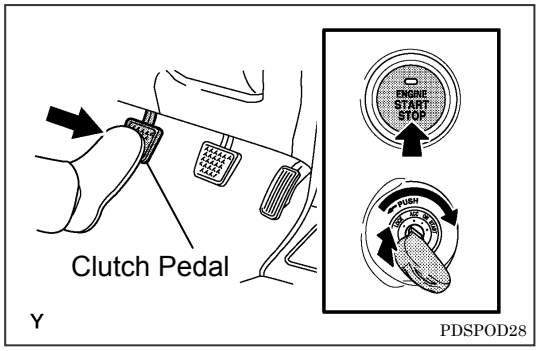

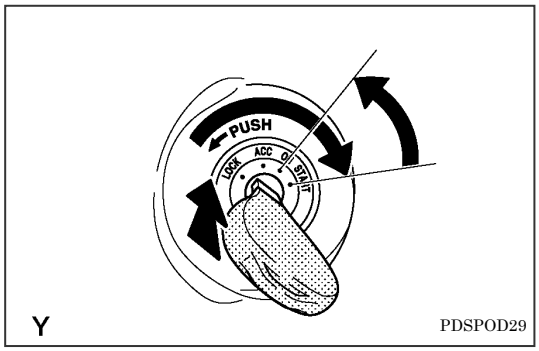

d) Cranking hold system*:
   1. Turn the ignition switch to the “START” position and immediately return to the “ON” position.
   2. Check that the engine continues to crank for up to approximately 25 seconds until the engine starts.

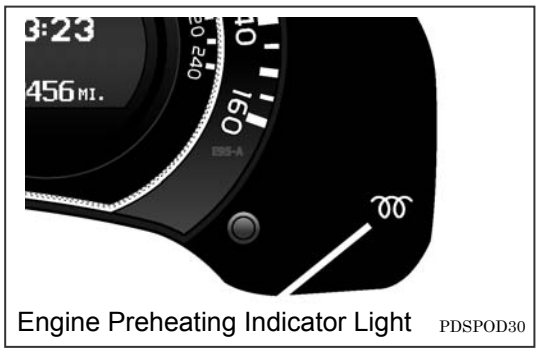

e) Glow control system (diesel engine model):
   Turn the ignition (engine) switch ON (IG) and check that the engine preheating indicator light illuminates and then turns OFF.

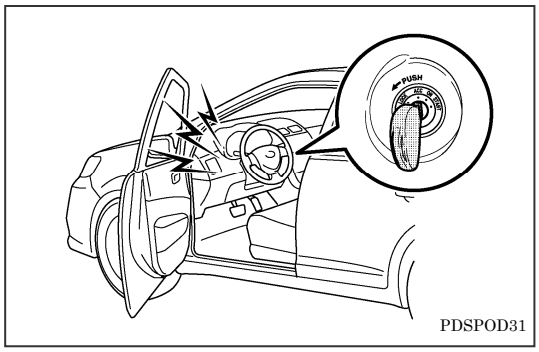

f) Key reminder function:
   Open the driver’s door with the ignition (engine/power) switch OFF or ON (ACC) and check that the buzzer sounds to warn you to remove the key.

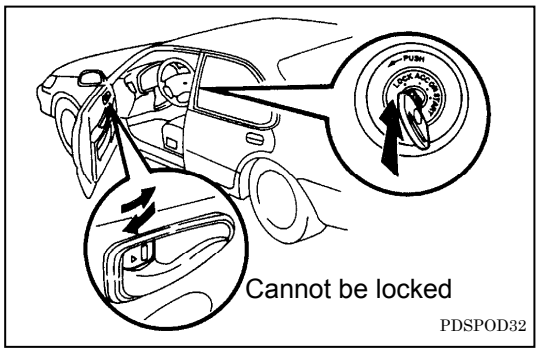

g) Key confinement prevention mechanism operation:
   Check that the door lock does not operate when the ignition key is left in the “ACC” or “LOCK” position and the driver's door is opened.

*: Inspect or install when equipped/required.

D12. CHECK WARNING LIGHTS

Turn the ignition (engine/power) switch ON (IG) and check the operations of the warning lights.

Warning Lights			
Light	Name	Light	Name
PDSPOD33	Master Warning Light	A/T OIL TEMP PDSPOD44	Automatic Transmission Fluid Temperature Warning Light
ABS PDSPOD34	ABS Warning Light	or AIR FILTER PDSPOD45	Clogged Air Cleaner Filter Warning Light
PDSPOD35	Charging System Warning Light	NIGHT VIEW PDSPOD46	Night View System Warning Light
PDSPOD36	Engine Coolant Temperature Warning Light Red: High Coolant Temperature Blue: Low Coolant Temperature	PDSPOD47	Rear Light Failure Warning Light
PDSPOD37	Low Engine Oil Pressure Warning Light	PDSPOD48	Tire Pressure Operation Warning Light
PDSPOD38	Low Engine Oil Level Warning Light	FILTER PDSPOD39	Fuel Filter Warning Light
PDSPOD40	Low Fuel Level Warning Light	T-BELT PDSPOD41	Timing Belt Replacement Warning Light
A/T P PDSPOD52	Unengaged “Park” Warning Light	VGRS PDSPOD42	VGRS (Variable Gear Ratio Steering) Warning Light
PDSPOD53	Slip Indicator Light	P/S PDSPOD43	Electric Power Steering Warning Light
MAINT REQD PDSPOD55	Engine Oil Replacement Warning Light	PDSPOD69	Engine Oil Change Reminder Light
PDSPOD71	Low Washer Fluid Warning Light	CHECK PDSPOD72	Malfunction Indicator Light
PDSPOD73	Automatic Headlight Leveling System Warning Light		

Warning Lights (Only for Hybrid Vehicle)			
Light	Name	Light	Name
MAIN PDSPOD89	HV Battery Warning Light	READY PDSPOD97	Driving Ready Indicator Light

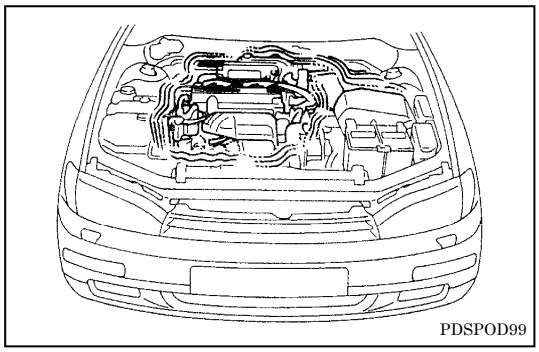

D13. CHECK ENGINE (HYBRID SYSTEM) OPERATION (COLD)

Check the engine (hybrid system) operation with particular attention to the followings.

- Starting performance of the engine (hybrid system)
- Idling stability (engine speed, abnormal noise or abnormal vibration)
- Following capability, abnormal noise, abnormal vibration or exhaust leaks when the accelerator pedal is operated

NOTICE:

Before starting the engine (hybrid system), confirm safety of the surroundings.

D14. CHECK TURN SIGNAL LIGHTS AND EMERGENCY FLASHERS

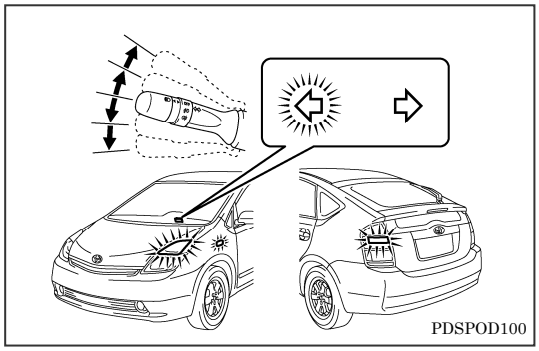

a) Turn signal light:
Move the turn signal lever up and down and check that the front, side and rear turn signal lights and turn signal indicator blink.

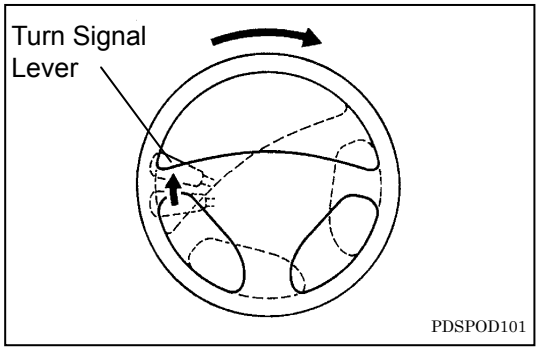

b) Turn signal self-canceling:
Check that the turn signal self-canceling operates properly.

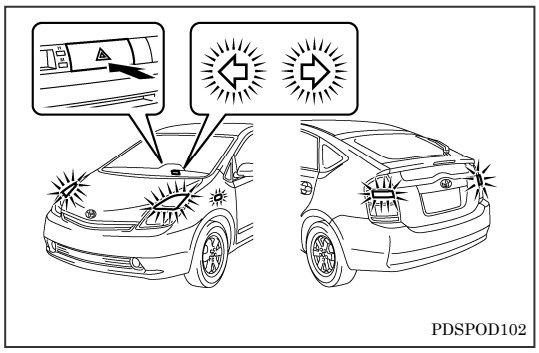

c) Emergency flasher:
Check that all turn signal lights, turn signal indicators and red indicators blink when the emergency flasher switch is "ON".

D15. CHECK EXTERIOR LIGHTS

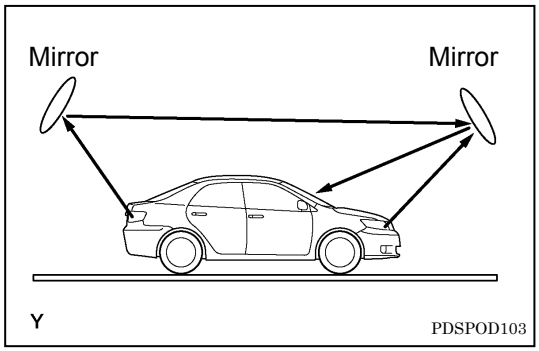

HINT:
It is efficient to use mirrors to check the exterior lights because you can do it alone in this way.

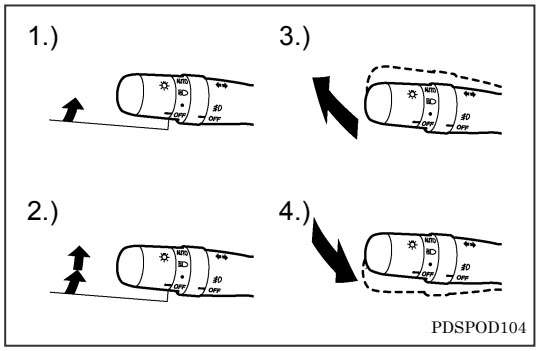

a) Headlight, clearance light, taillight, license plate light and indicator lights:
   1. Parking lights, taillights license plate light, clearlance lights and indicator lights
   2. Headlights
   3. High beam
   4. Headlight flasher

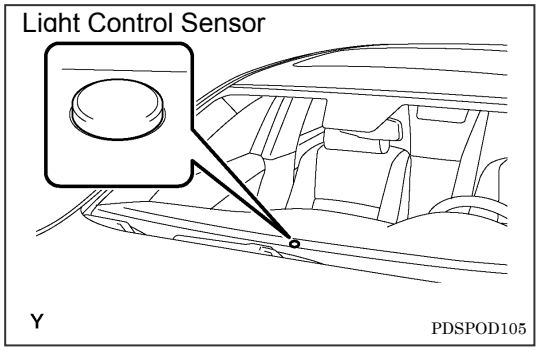

b) Automatic light control system*:
   1. Turn the headlight switch to the “AUTO” position.
   2. Cover the light control sensor from the light with the headlights OFF and check that the headlights turn ON automatically.

HINT:
The check must be performed in an area bright enough for the headlights to turn OFF automatically.

*: Inspect or install when equipped/required.

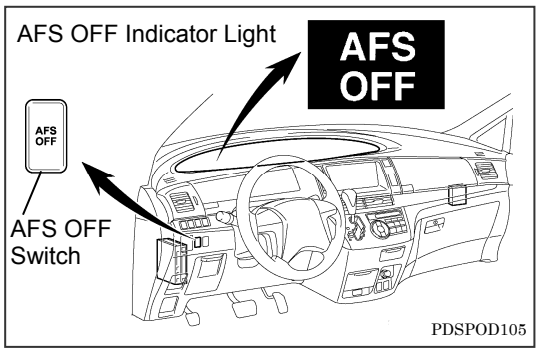

c) AFS (Adaptive Front-lighting System)*:
1. Turn the ignition (engine/power) switch ON (IG) and check that the “AFS OFF” indicator light illuminates and turns OFF after a few seconds.
2. Check that the “AFS OFF” indicator light illuminates when operating the “AFS OFF” switch.

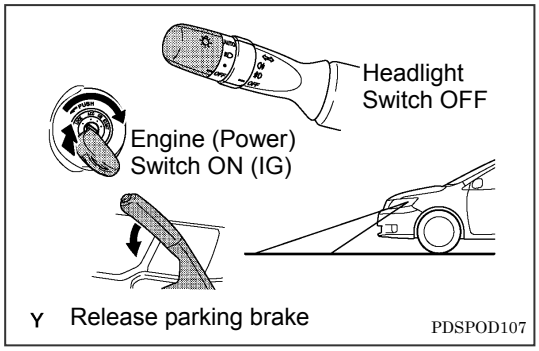

d) Daytime running light system*
1. Turn the ignition (engine/power) switch ON (IG) with the headlight switch OFF.
2. Release the parking brake and check that the headlights illuminate.

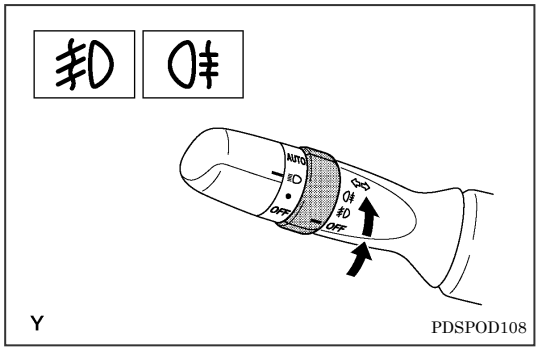

e) Fog lights (front and rear):
Check that the fog lights turn ON and the indicator light illuminates when turning the fog light switch ON.

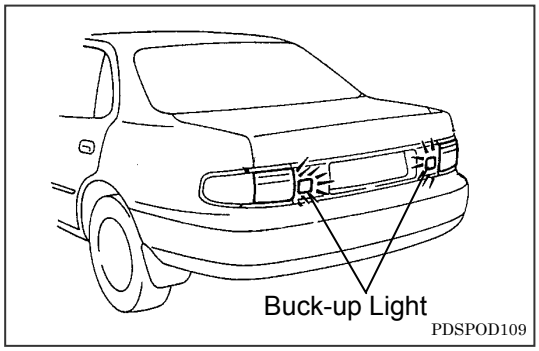

f) Buck-up light:
Check that the back-up lights turn ON and the buzzer sounds when moving the shift lever to the “R” position.

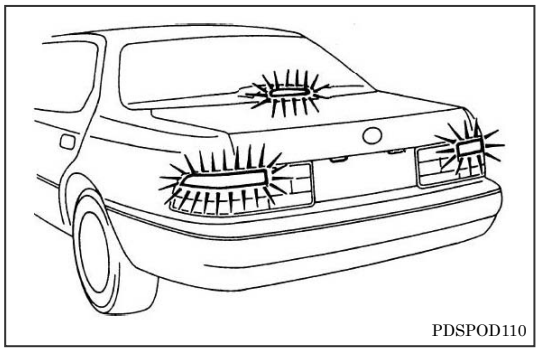

g) Stoplight and high mounted stoplight:
Check that the stoplights turn ON when depressing the brake pedal.

*: Inspect or install when equipped/required.

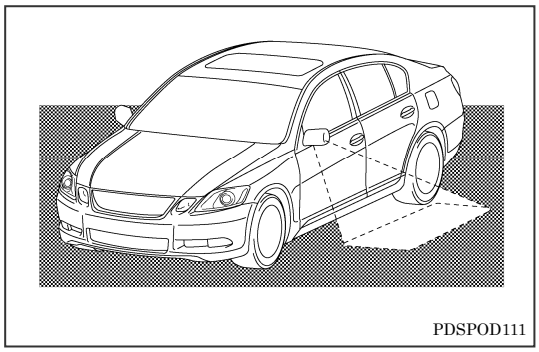

h) Other exterior lights
Check that other exterior lights such as the outer foot light operate properly.

D16. CHECK WIPERS AND WASHERS

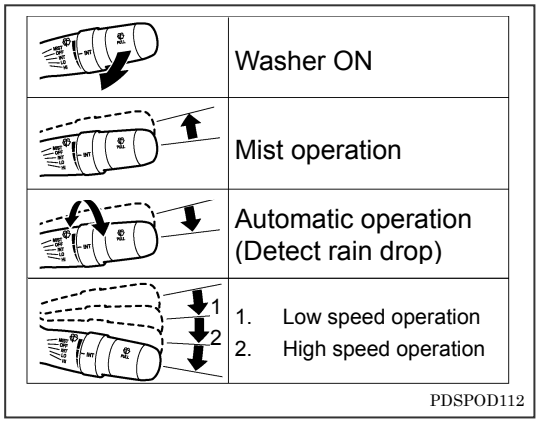

a) Wiper operation
1. Check that the washer fluid squirts onto the proper area of the windshield.
2. Check operation of the wipers (intermittent, low speed, high speed and mist operations).
3. Check that the wiper blades wipe off cleanly.
4. Check that the wipers should not make any abnormal noise while they are operating.
5. Check that the wiper arm should not contact the windshield moulding.

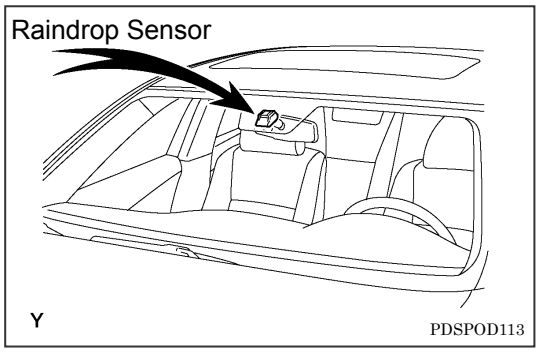

b) Rain-sensing windshield wipers
Put a few drops of water on the raindrop sensor with the windshield wipers and washer switch selected to “AUTO” and check that the wipers operate automatically.

D17. CHECK WINDOW OPERATION

NOTICE:

- On the vehicle with the power window system, leave the windows fully opened after the check.
- When the power window lock switch is ON, the power window switches other than that of the driver’s door cannot be operated.

HINT:

- Jam protection function:
  The jam protection function automatically stops the power window and moves it downward if foreign object gets jammed in the door window.
- Key off operation:
  The key off operation makes it possible to operate the power windows for approximately 45 seconds after the ignition (engine/power) switch is turned OFF. However, the power windows cannot be operated once either front door is opened.

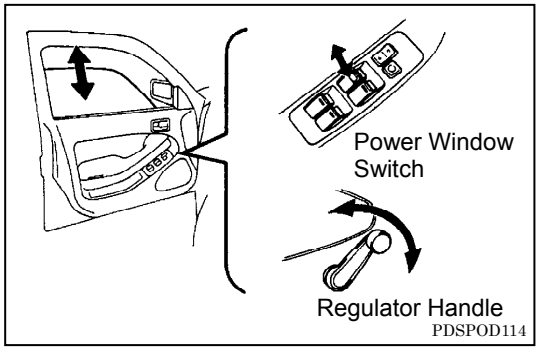

a) Window operation (front, rear, slide, back door and quarter windows):
   - Manual window:
     Check that the door windows open and close smoothly using the regulator handle on each door.
   - Power window:
     Check that the door windows open and close smoothly using the power window switches on each door.

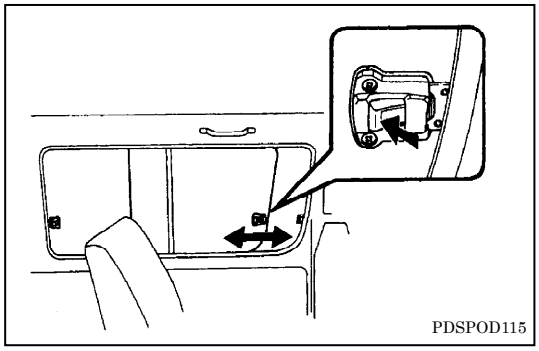

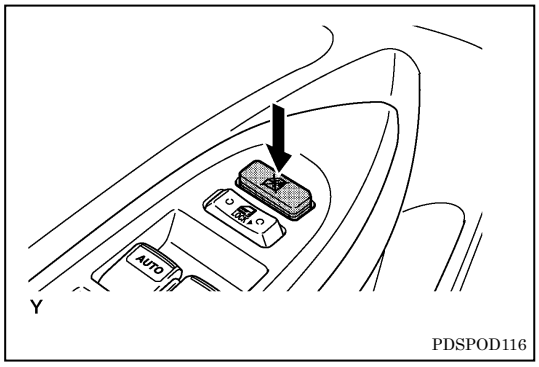

b) Power window lock switch:
   Turn the power window lock switch ON and check that the passenger windows cannot be operated by the power window switches other than the power window master switch.

D18. CHECK DOOR LOCKS

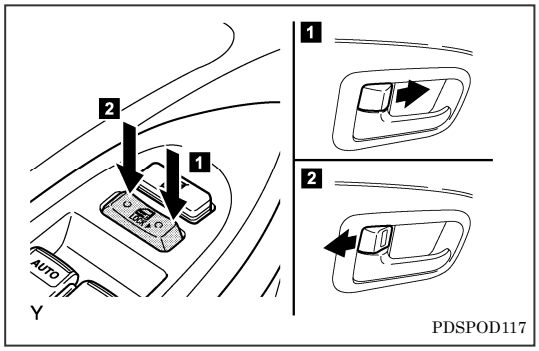

a) Power door lock switch:
Check that all the doors can be locked and unlocked with the power door lock switch.

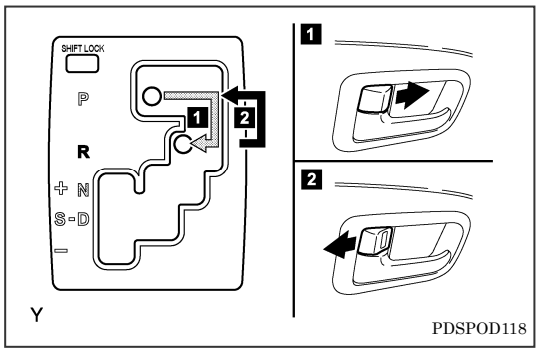

b) Shift-linked automatic door lock system*:
1. Move the shift lever from the P position to the R position with the ignition (engine/power) switch ON (IG) and check that all the doors are locked.
2. Move the shift lever to the P position with the ignition (engine/power) switch ON (IG) and check that all the doors are unlocked.

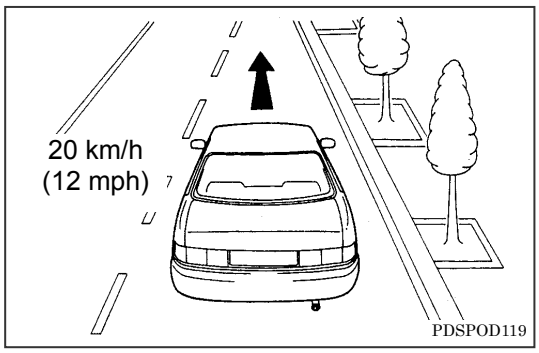

c) Speed-sensitive automatic door lock system*:
Check that all the doors are locked when the vehicle speed reaches 20 km/h (12 mph) or more.

HINT:
This check should be performed in the road test.

D19. CHECK INTERIOR PARTS FOR DIRT, DAMAGE, AND PROPER FIT AND ALIGNMENT

► See page 43 (D06.).

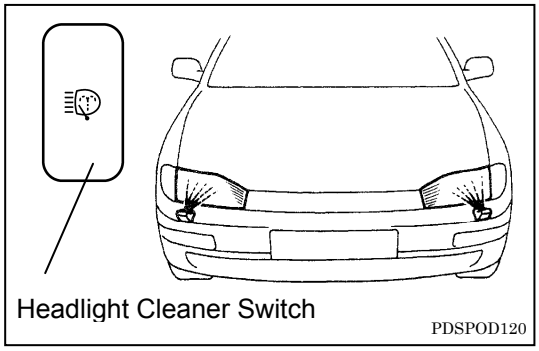

D20. CHECK HEADLIGHT CLEANERS*

Check that the headlight cleaner nozzles spray the washer fluid when turning the headlights ON and pressing the headlight cleaner switch.

*: Inspect or install when equipped/required.

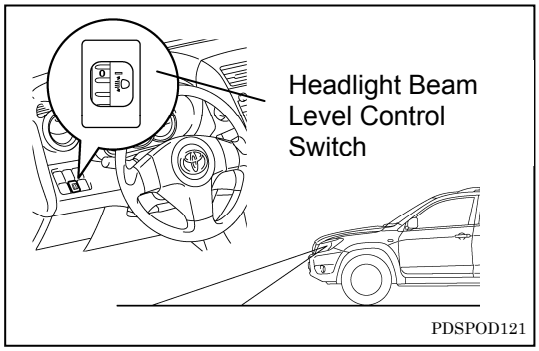

D21. CHECK HEADLIGHT BEAM LEVEL CONTROL SYSTEM*

Turn the headlight switch ON, operate the headlight beam level control switch and check that the headlight beam level can be adjusted.

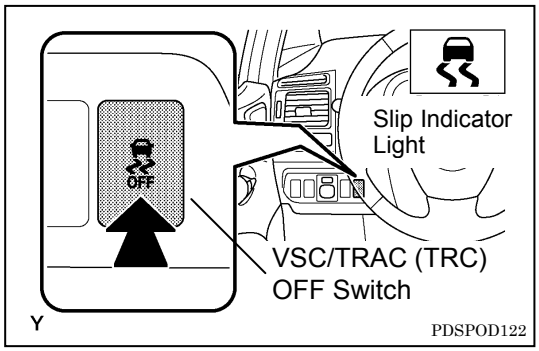

D22. CHECK VSC/TRAC (TRC)*

Operate the VSC/TRAC (TRC) “OFF” switch and check that the slip indicator light illuminates.

D23. CHECK OUTSIDE REAR VIEW MIRROR (REMOTE CONTROL MIRROR)

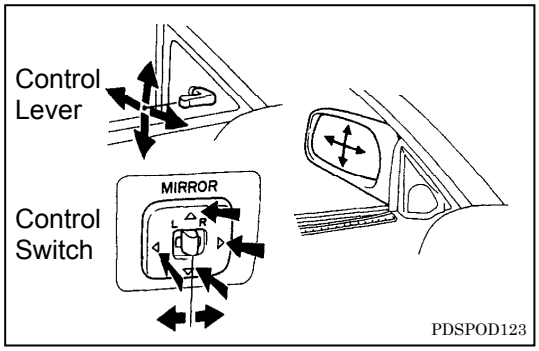

a) Mirror angle adjustment:
   1. Check that the outside rear view mirror can be adjusted smoothly.
   2. The outside rear view mirror should not make any abnormal noise when operating.

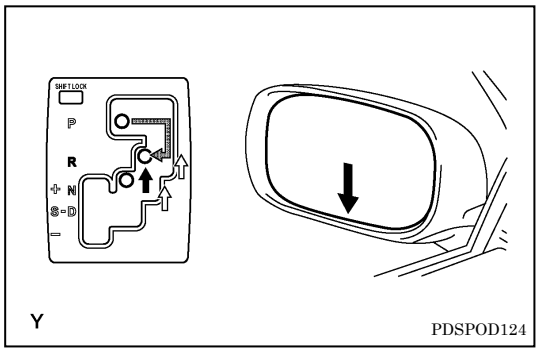

b) Reverse-linked mirror*:
   Check that the outside rear view mirror on the front passenger’s side tilts downward when moving the shift lever to the “R” position.

*: Inspect or install when equipped/required.

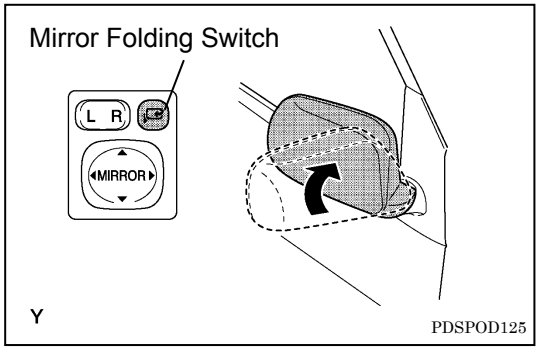

c) Manual retractable mirror*:
Press the mirror folding switch and check that the outside rear view mirror retracts.

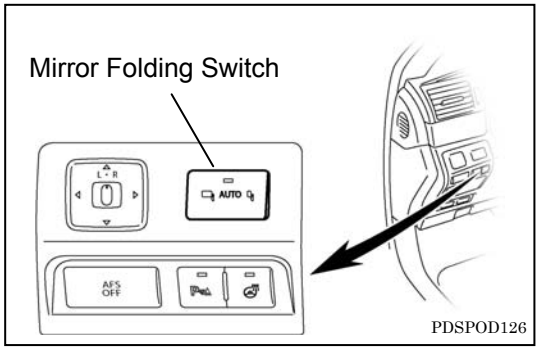

d) Automatic retractable mirror*:
Turn the ignition (engine/power) switch OFF with the mirror folding switch in the “AUTO” mode and check that the outside rear view mirrors retract.
Turn the ignition (engine/power) switch ON (IG) with the mirror folding switch in the “AUTO” mode and check that the outside rear view mirrors return to their original positions.

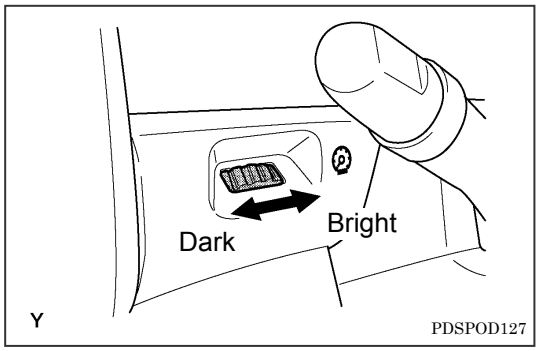

D24 CHECK INSTRUMENT PANEL LIGHT CONTROL

Check the operation of the instrument panel light control switch. Also, check that the illuminance of the instrument panel, radio, heater control panel and switches can be changed.

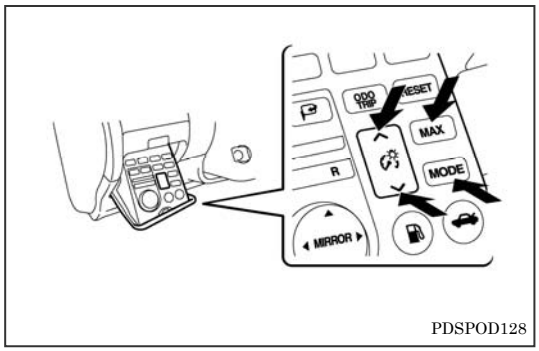

*: Inspect or install when equipped/required.

D25. CHECK OTHER ITEMS*

D25-1. CHECK POWER HEATER

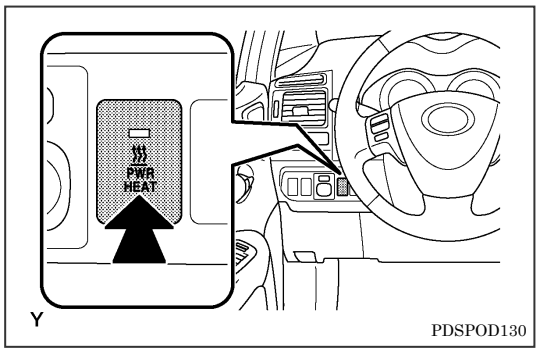

1. Check that the idle speed increases when pressing the power heater switch.

HINT:
The electric cooling fans continue to operate for a few minutes after the power heater switch is turned OFF.

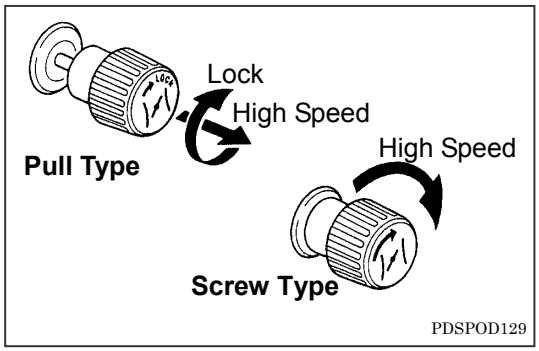

2. Check that the idle speed increases and decreases by operating the throttle knob.

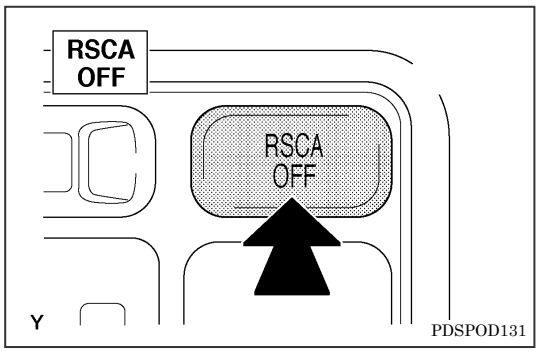

D25-2. CHECK OTHER ELECTRICAL COMPONENTS

Check the switch and indicator light of each system for any problems in the operation.

- Hands-free phone system
- RSCA (Roll Senisng of Curtain shield Airbag) OFF switch
- Power adjustable pedals
- DCAT (Diesel Clean Advanced Technology) switch
- Fuel tank changeover switch
- Airbag manual ON-OFF switch
- Unlock spare tire carrier
- Others

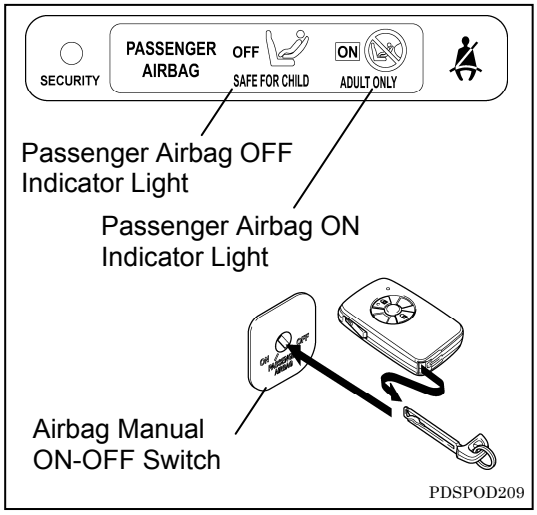

*: Inspect or install when equipped/required.

D26. CHECK INTERIOR PARTS FOR DIRT, DAMAGE AND PROPER FIT AND ALIGNMENT

► See page 43 (D06.).

D27. CHECK CLOCK AND OUTSIDE TEMPERATURE DISPLAY

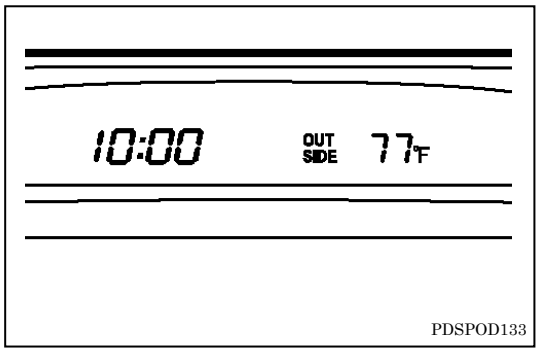

PDSPOD133

a) Clock:
   1. Set the clock. (For the setting method, refer to the Owner's Manual of the particular model.)
   2. Check that the clock operates properly.

HINT:
For the clock with the automatic adjustment function, set the time zone.

b) Outside temperature display*:
   Check that the outside temperature display operates properly.

D28. CHECK AUDIO SYSTEM

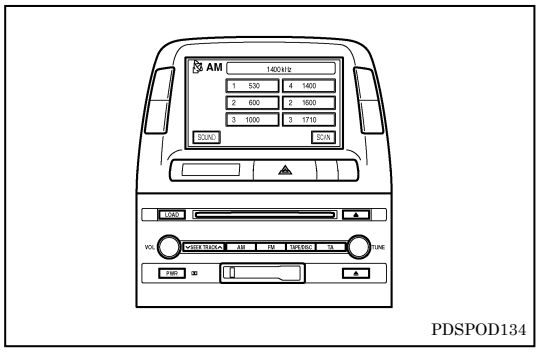

PDSPOD134

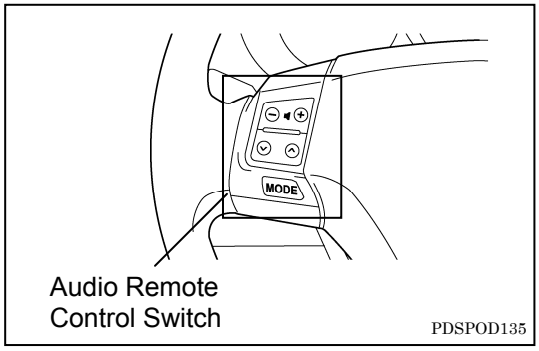

Audio Remote Control Switch
PDSPOD135

a) Audio system:
   Check that each function operates properly.
   - Power switch ON/OFF
   - Volume adjustment
   - Operations of radio, CD, MD and DVD
   - Sound quality and balance adjustments
   - Headphone
   - Magazine type CD player
   - Radio auto antenna

b) Audio remote control switch:
   Check that each switch (ON, OFF, volume, mode, seek, track, etc.) operates properly.
   - Steering switch (mode, volume, V∧)
   - Remote controller
   - Rear seat audio switch

*: Inspect or install when equipped/required.

D29. CHECK AIR CONDITIONING SYSTEM

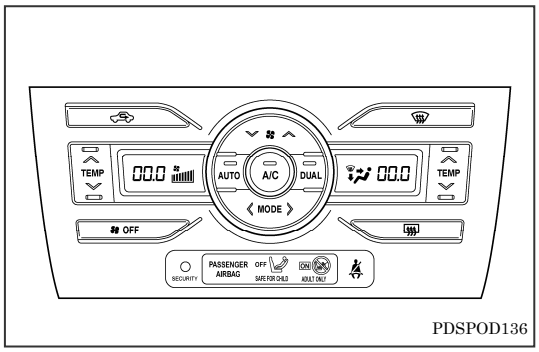

PDSPOD136

a) Air conditining system control:
- Fan speed control switch (including automatic mode)
- Switch to select air outlet
- Temperature control switch
- Outside air and recirculated air mode switch
- Air conditioning ON/OFF switch

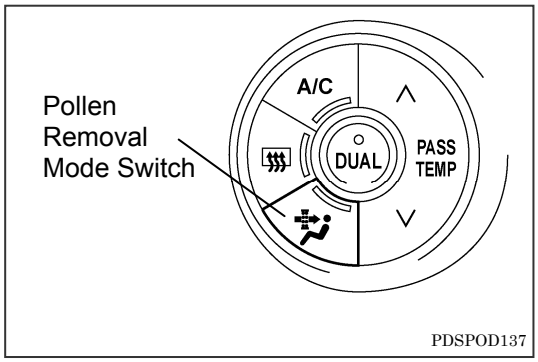

PDSPOD137

b) Others*:
- Pollen removal mode
- Swing
- Air purifier

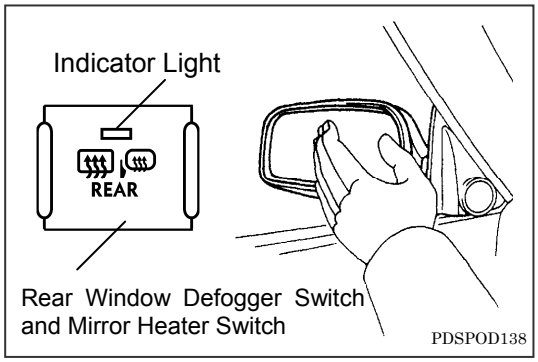

PDSPOD138

D30. CHECK REAR WINDOW AND OUTSIDE REAR VIEW MIRROR DEFOGGERS

Press the rear window defogger switch and mirror heater switch and check that the indicator light illuminates and the mirror heaters operate properly.

D31. CHECK CIGARETTE LIGHTER AND POWER OUTLET (DC 12 V, AC 115 V)*

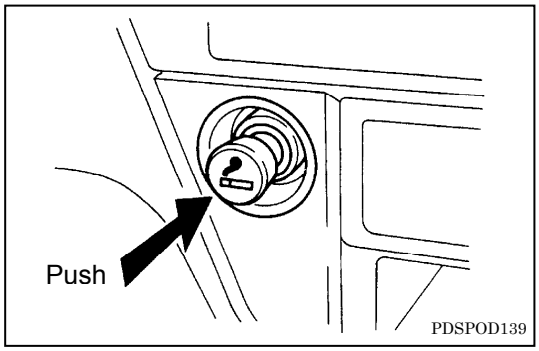

PDSPOD139

a) Cigarette lighter:
Push the cigarette lighter and check that the coils are bright red when the lighter automatically pops out.

*: Inspect or install when equipped/required.

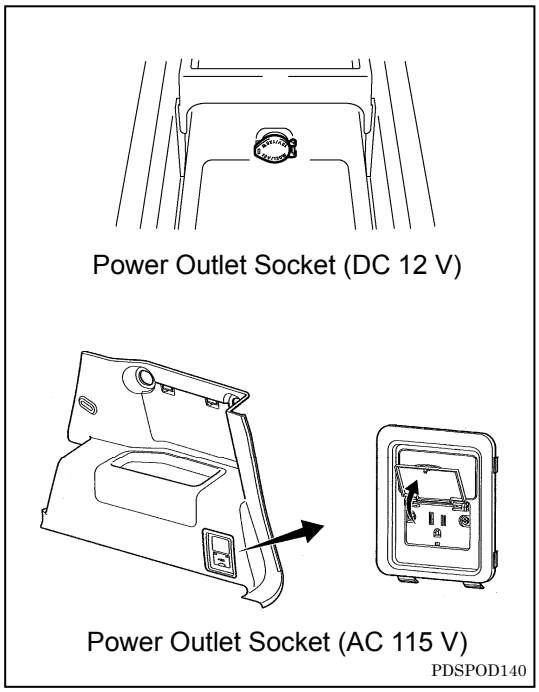

b) Power outlet socket:
Check that the power is properly supplied using the electrical accessory suitable for each power outlet socket.

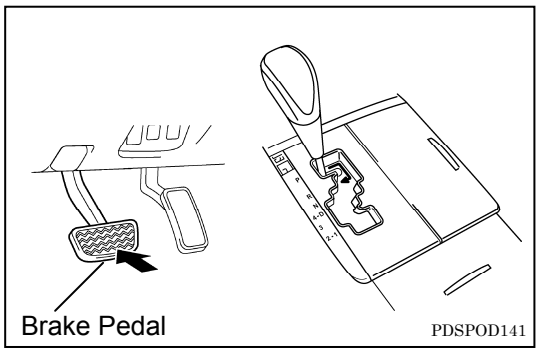

D32. CHECK SHIFT LEVER

a) Shift lock system:
Check that the shift lever cannot be moved from the “P” position while the brake pedal is not depressed.

HINT:
If the shift lever is moved with the shift lock override button pressed, the shift lock system is released. As a result, the shift lever can be moved from the “P” position even while the brake pedal is not depressed.

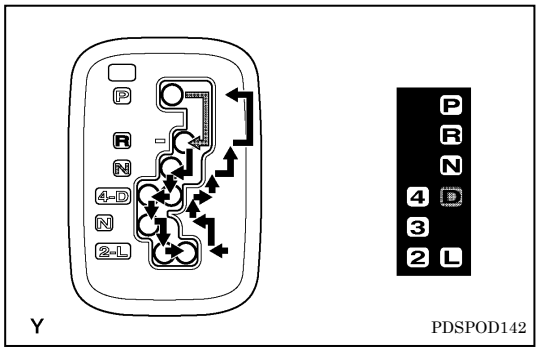

b) Automatic transmission (transaxle) indicator light and reverse warning buzzer:
1. Apply the parking brake, depress the brake pedal and start the engine (hybrid system).
2. Move the shift lever to each position and check that the automatic transmission (transaxle) indicator light changes depending on the shift position that is selected.
3. Move the shift lever to the “R” position and check that the reverse warning buzzer sounds.

D33. CHECK ACCESSORY BOXES*

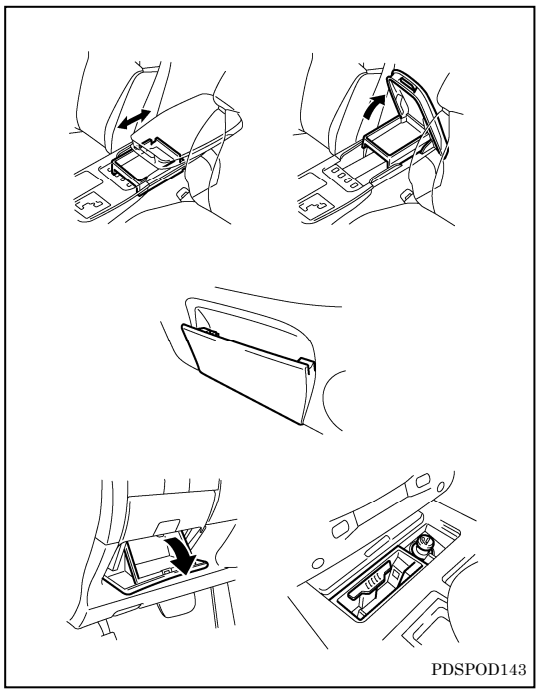

a) Accessory box:
Check that each box opens and closes properly.
1. Driver's seat
   - Ashtray
   - Console box, arm rest
   - Overhead console box
   - Door pocket
   - Center tray
   - Seat under tray
   - Door pocket
   - Other accessory boxes
2. Rear seat
   - Ashtray
   - Arm rest
   - Seat under tray
   - Pocket at quarter trim
   - Other accessory boxes
3. Luggage compartment
   - Under-floor storage
   - Other accessory boxes
4. Front passenger's seat
   - Glove box
   - Upper box
   - Overhead console box
   - Door pocket
   - Seat under tray
   - Other accessory boxes

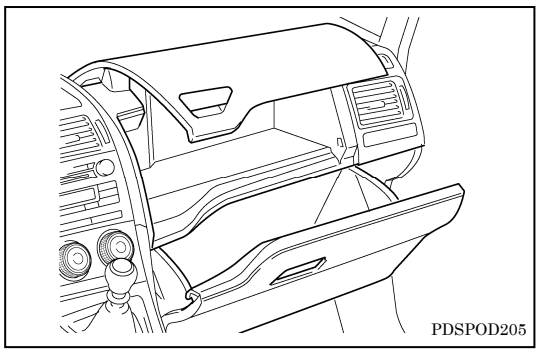

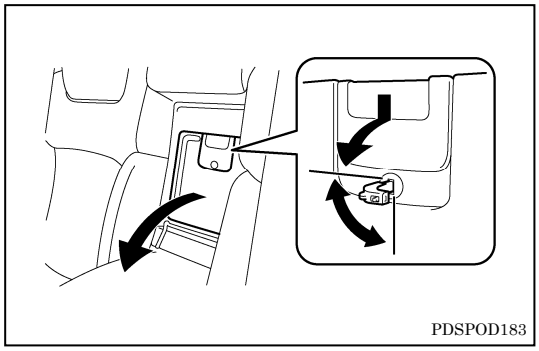

b) Box door lock:
Check that the box door locks and unlocks properly and the box door opens and closes smoothly.
1. Rear seat
   - Center armrest door
   - Other box door lock

*: Inspect or install when equipped/required.

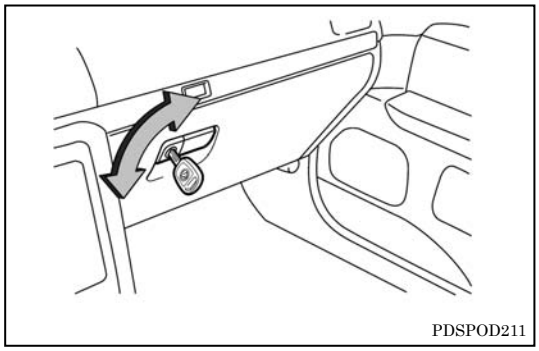

2. Front passenger's seat
   - Glove box door
   - Other box door locks

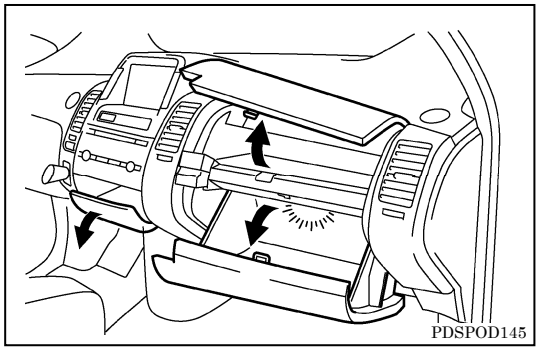

c) Box light:
   Check that the box light turns ON when the box door is opened.
   - Console box
   - Other box lights

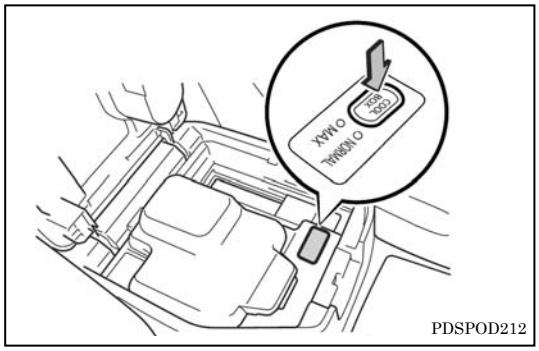

d) Cool box:
   1. Check that the door of the cool box opens and closes smoothly.
   2. Turn the cool box switch ON and check the cooling operation of the cool box for any troubles.

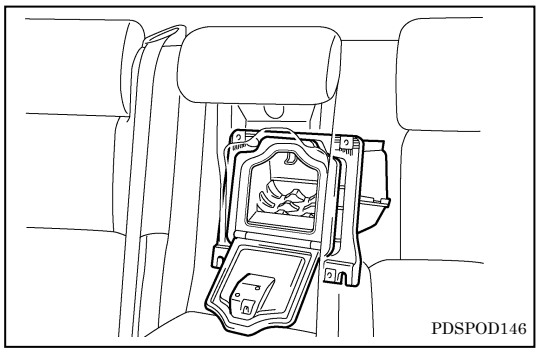

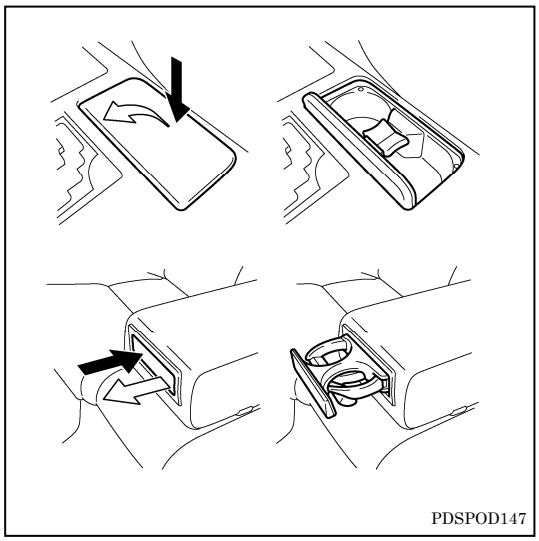

e) Holder:
Check the function of each holder for any troubles. Also, check the drawing mechanism and the door of the holder for any troubles.
- Card holder
- Pen holder
- Coin holder
- Flash light holder
- Cup/bottle holder
- Other holders

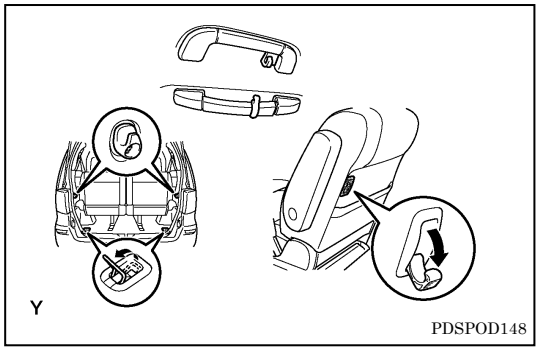

f) Hook:
Check the function and operation of each hook for any troubles.
- Coat hook
- Shopping bag hook
- Cargo hook
- Cargo net hooks
- Tie-down hooks
- Other hooks

D34. CHECK OTHER ITEMS*

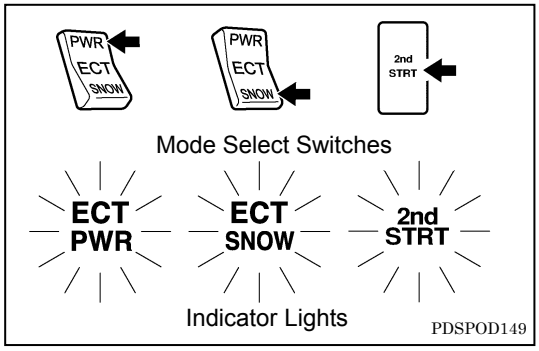

D34-1. CHECK ECT (ELECTRONICALLY CONTROLLED AUTOMATIC TRANSMISSION/TRANSAXLE) AND HYBRID MODE SELECT

Check that each indicator light illuminates when the mode select switch is operated.
- ECT PWR (Hybrid PWR)
- SNOW (Hybrid SNOW)
- 2nd START

D34-2. CHECK NIGHT VIEW SYSTEM

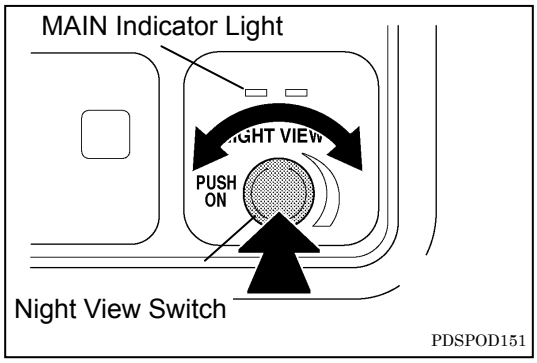

1. Turn the night view switch ON and check that the “MAIN” indicator light illuminates.
2. Turn the headlights ON, cover the light control sensor from the light and check that the night view display operates.
3. Operate the night view switch and check that the brightness of the night view display can be adjusted.

*: Inspect or install when equipped/required.

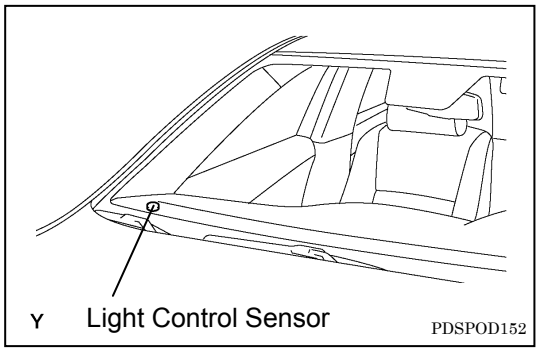

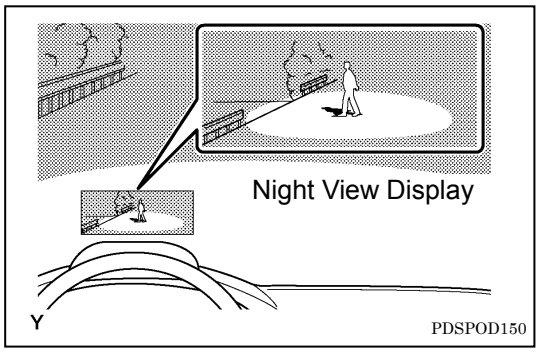

HINT:

- When the vehicle speed reaches 30 km/h (19 mph) or more, the night view projector irradiates near-infrared rays. Then, the night view display becomes brighter to the preset brightness.
- While the night view projector irradiates near-infrared rays, the “BEAM” indicator light illuminates.
- When a malfunction occurs in the night view system, the night view warning light illuminates.

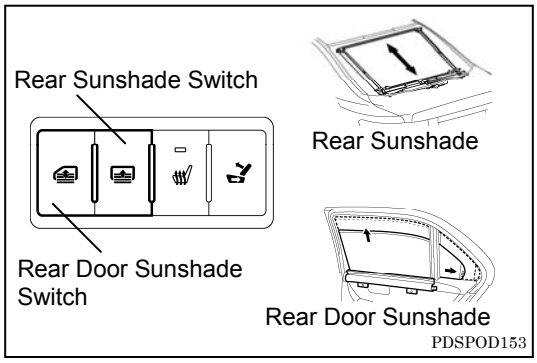

D34-3. CHECK REAR SUNSHADE AND REAR DOOR SUNSHADE

Manually or electrically operate the rear sunshade and rear door sunshade and check the operation for any troubles.

D34-4. CHECK INTUITIVE PARKING ASSIST SYSTEM (TOYOTA PARKING-ASSIST SYSTEM)

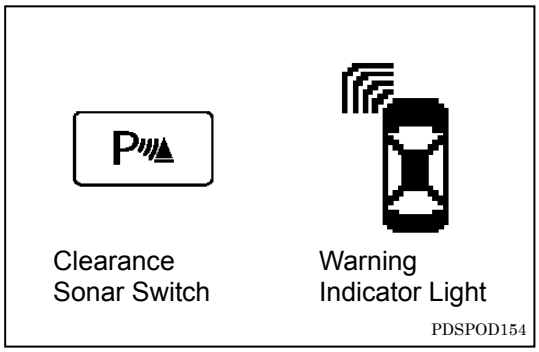

a) Intuitive parking assist system:
Check that the buzzer sounds and the warning indicator light illuminates in the following cases: The clearance sonar switch is turned ON; the clearance sonar detects an obstacle.

HINT:

- This system operates while the vehicle speed is 10 km/h (6 mph) or less.
- In some vehicles, the rear ultrasonic sensor operates only when the shift lever is in the “R” position.

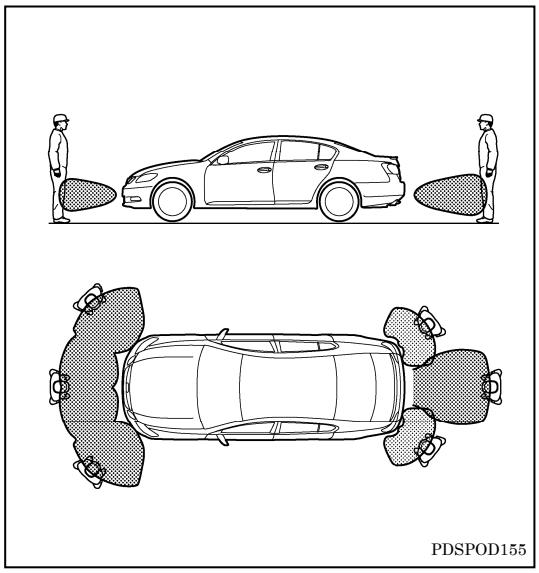

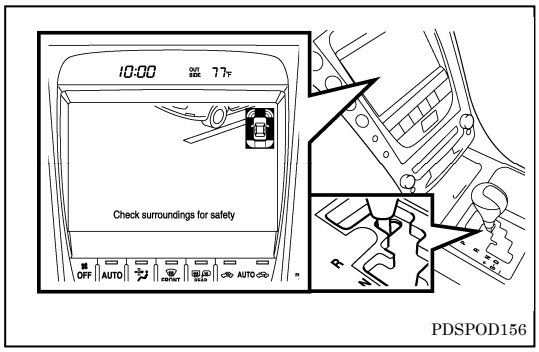

b) Rear view monitor system and parking assist system:
   1. Check that the display indicates a view behind the vehicle when the shift lever is moved to the “R” position.

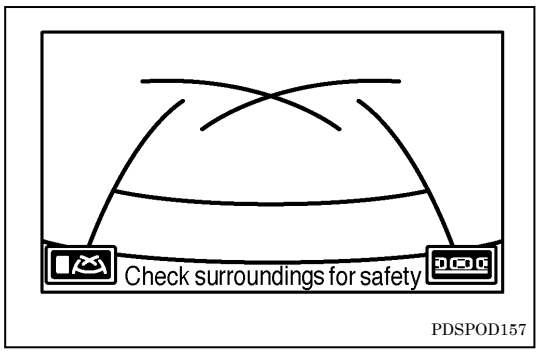

   2. In the parking assist monitor, check that the guide lines are displayed and they move in conjunction with the operation of the steering wheel.

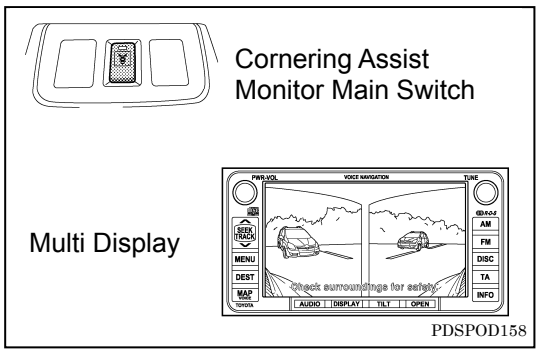

c) Cornering assist monitor:
   - Turn the cornering assist monitor main switch ON and check that the indicator light illuminates.
   - Move the shift lever to any position other than “R” position and check that a view in front of the vehicle is indicated on the multi display.

HINT:

This system operates while the vehicle speed is 10 km/h (6 mph) or less.

D34-5. CHECK SUSPENSION CONTROL SYSTEM

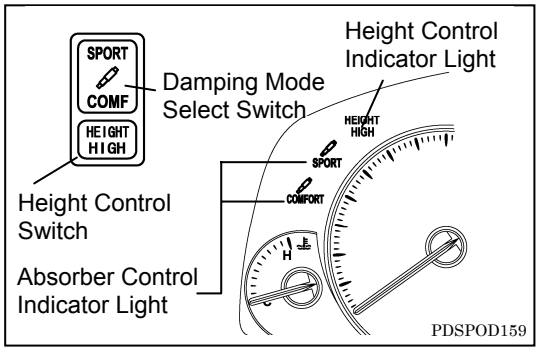

a) Electronic modulated suspension (TEMS (Toyota Electric Modulated Suspention), AVS (Adaptive Variable Suspension)):
Operate the damping mode select switch and check that the absorber control indicator light illuminates.

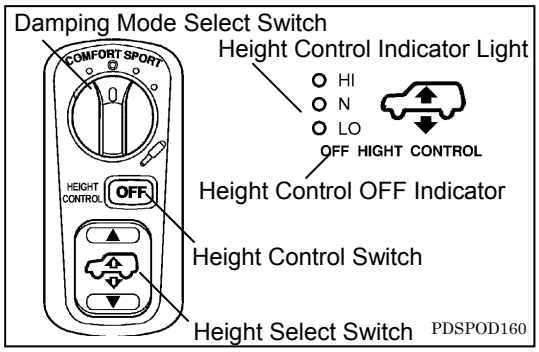

b) Height control suspension (AHC (Active Height Control)):
1. Press the height control switch and check that the height control OFF indicator illuminates.
2. Operate the damping mode select switch and check that the vehicle height changes and the height control indicator light illuminates.

HINT:
The operating conditions of the height control suspension are as follows:
- The engine (hybrid system) is running.
- All the doors are closed.
- The height control OFF indicator is turned OFF.

D35. CHECK INTERIOR PARTS FOR DIRT, DAMAGE AND PROPER FIT AND ALIGNMENT

► See page 43 (D06.).

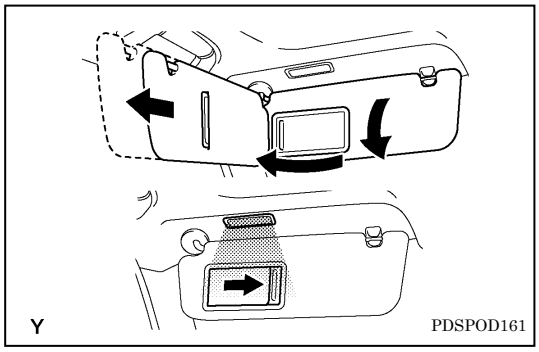

D36. CHECK SUN VISOR AND VANITY MIRROR

1. Check that the sun visor operates properly.
2. Check that the vanity mirror and vanity mirror light operate properly.

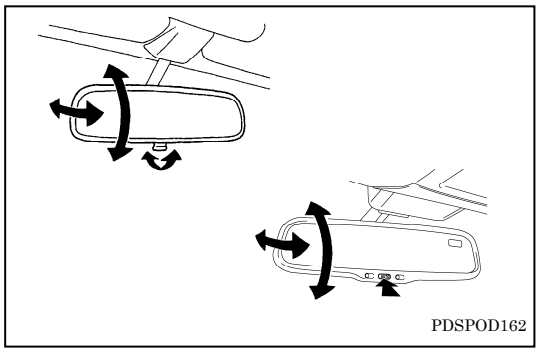

D37. CHECK INSIDE REAR VIEW MIRROR

1. Check that the inside rear view mirror can be adjusted smoothly and be held firmly.
2. Check the operation of the day-night change lever of the inside rear view mirror.
3. Check that the mode changes between the "AUTO" mode (mode indicator ON) and "DAY" mode (mode indicator OFF) alternately by pushing the "AUTO" switch.
4. Turn the interior light ON, cover the rear view mirror forward light sensor and check that the rear view mirror darkens.

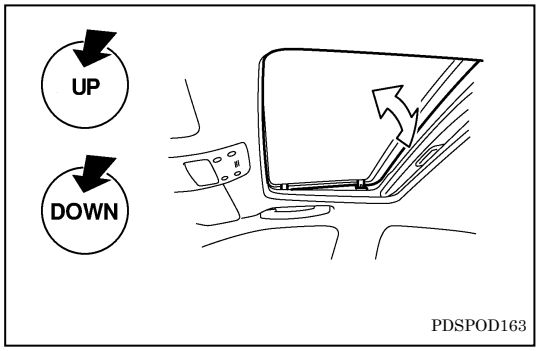

D38. CHECK SLIDING ROOF (SLIDE AND TILT)*

Check that each switch (for the sun shade, tilting operation, sliding operation, automatic operation and deflector) operates properly.

CAUTION:

Be careful not to get your hand or head jammed when opening and closing the sliding roof.

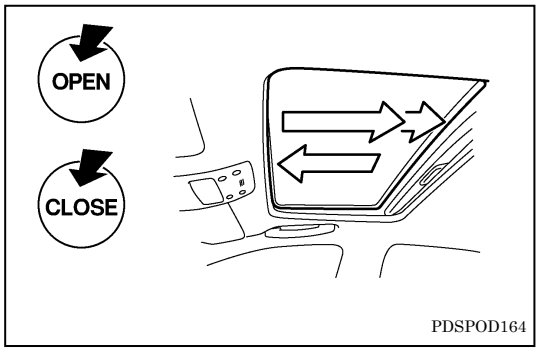

HINT:

- Jam protection function:
  If an object is detected between the sliding roof and the frame while the sliding roof is closing or tilting down, travel is stopped and the sliding roof opens slightly.
- Operating the sliding roof after turning the ignition (engine/power) switch OFF:
  The sliding roof can be operated for approximately 45 seconds even after the ignition (engine/power) switch is turned ON (ACC) or OFF. It cannot, however, be operated once the driver's door is opened.
- Sliding roof open warning:
  When the ignition (engine/power) switch is turned from ON (IG) to OFF and the driver's door is opened with the sliding roof open, the buzzer sounds.

*: Inspect or install when equipped/required.

D39. CHECK INTERIOR LIGHTS

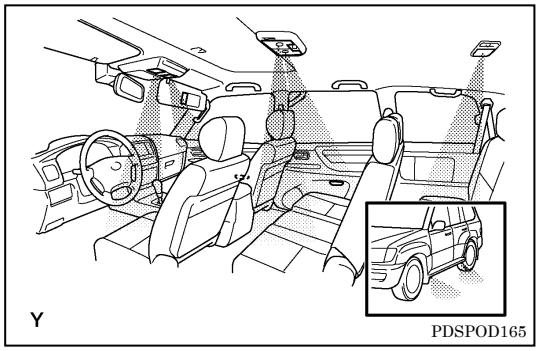

a) Illuminated entry system:
Check the illuminated entry system operation. The following lights illuminate when the door opens and closes and the ignition (engine/power) switch is turned ON (IG) and OFF.
- Outer foot light
- Steering spot light
- Front personal lights
- Shift lever light
- Front interior lights
- Inside door handle lights
- Rear personal lights
- Rear interior lights
- Door courtesy lights
- Foot light
- Front scuff light
- Other lights

b) Interior lights:
Check operation of the interior lights.

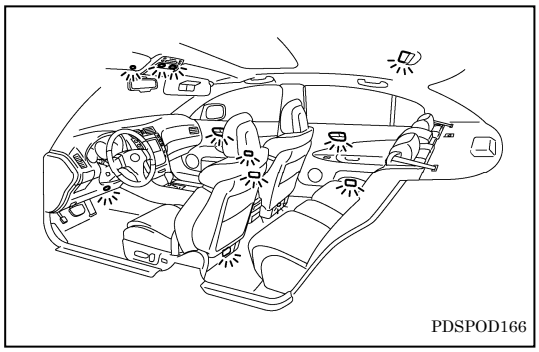

D40. CHECK OTHER ITEMS*

D40-1. CHECK GARAGE DOOR OPENER

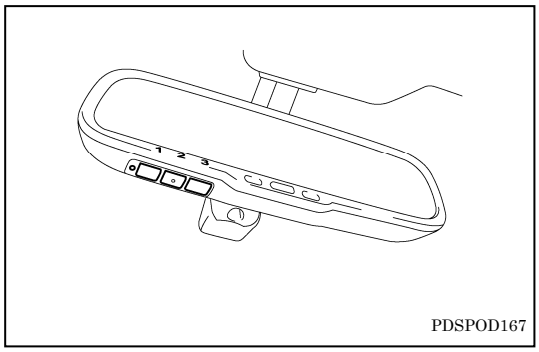

Check the garage door opener by pressing the buttons and observing that the indicator light illuminates.

D41. CHECK INTERIOR PARTS FOR DIRT, DAMAGE AND PROPER FIT AND ALIGNMENT

► See page 43 (D06.).

*: Inspect or install when equipped/required.

D42. CHECK SEAT BELT

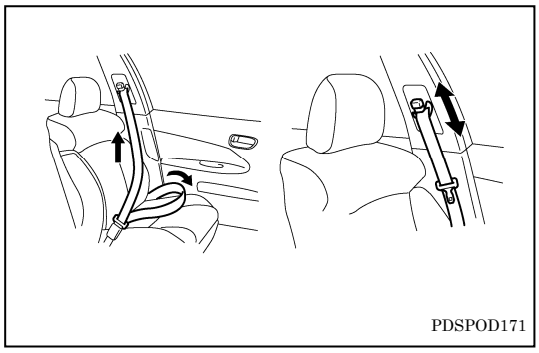

a) Seat belt
   1. Check the seat belt operation.
   2. Check that the seat belt extends and retracts smoothly.
   3. Check that the seat belts are not twisted.
   4. Check that the buckle locks securely and releases smoothly.

b) Adjustable seat belt anchor (manual type and power type):
   Check that the adjustable seat belt anchor operates properly and that it securely locks in position.

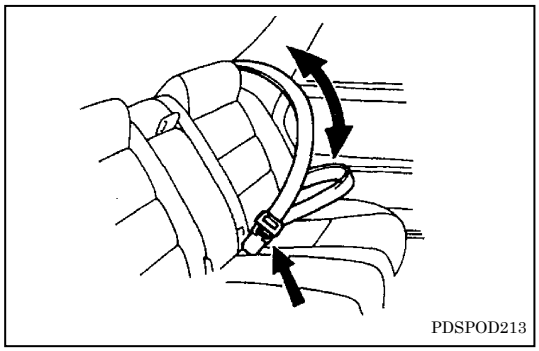

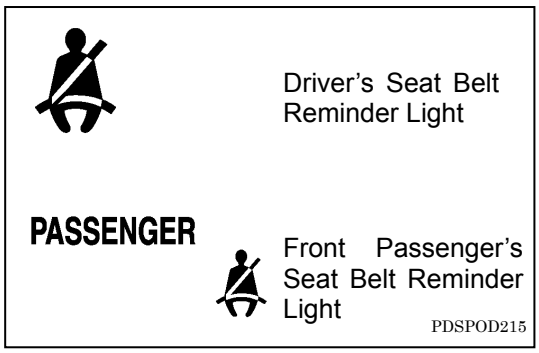

c) Seat belt reminder light and warning buzzer
   1. Check that the seat belt reminder light and warning buzzer operate when turning the ignition (engine/power) switch ON (IG).
   2. Check that the seat belt reminder light and warning buzzer stop operating when the seat belt is fastened.

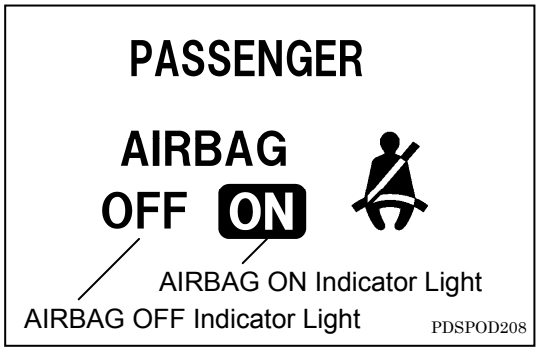

d) Front passenger occupant classification system*
   1. Turn the ignition (engine/power) switch ON (IG) and check that the AIRBAG ON indicator light and AIRBAG OFF indicator light illuminate and turn OFF after a few seconds.
   2. Sit on the front passenger's seat without placing your whole weight and check that the AIRBAG OFF indicator light illuminates.
   3. Sit on the front passenger's seat with placing your whole weight and check that the AIRBAG ON indicator light illuminates.

*: Inspect or install when equipped/required.

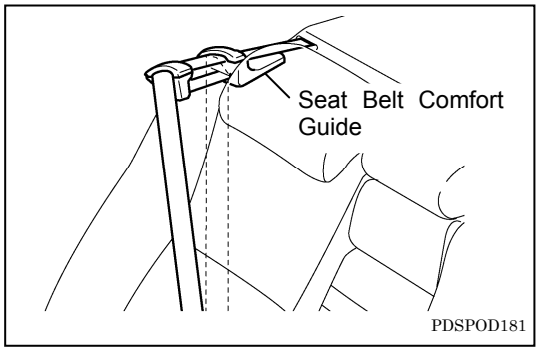

e) Seat belt comfort guide
Check that the seat belt comfort guide operates properly.

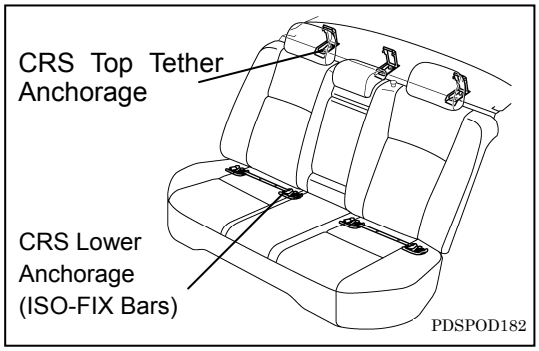

f) Child restraint system:
Set the following seats and check that they can be fixed securely.
- Baby seat
- Child seat
- Junior seat

D43. CHECK SEAT

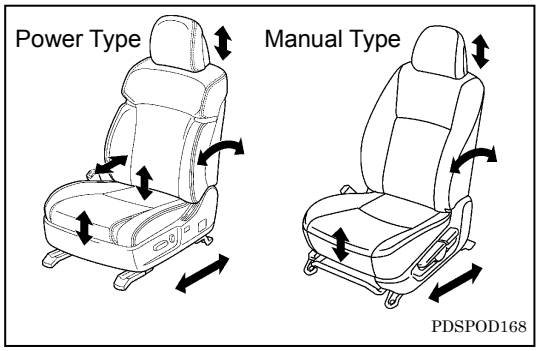

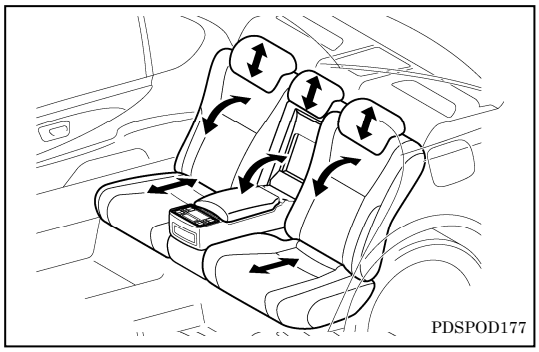

a) Seat adjustment:
Check that the seat slides smoothly, reclines properly and locks securely in any position.
- Seat slide adjustment
- Seat back reclining adjustment
- Seat vertical adjustment
- Lumbar support adjustment
- Head restraint adjustment
- Armrest
- Ottoman
- Folding down rear seatbacks
- Stowing function*
- Other adjustment functions

*: Inspect or install when equipped/required.

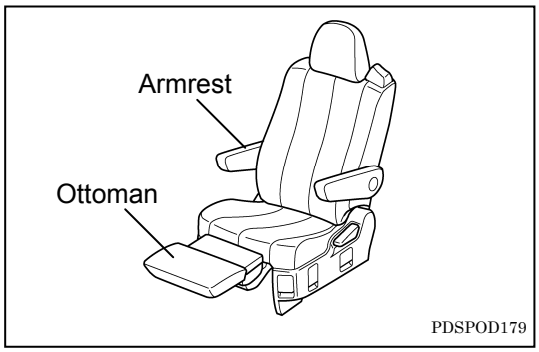

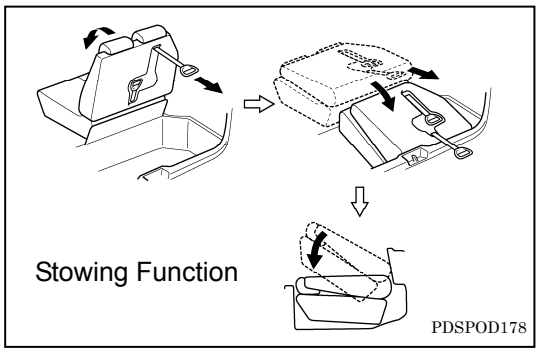

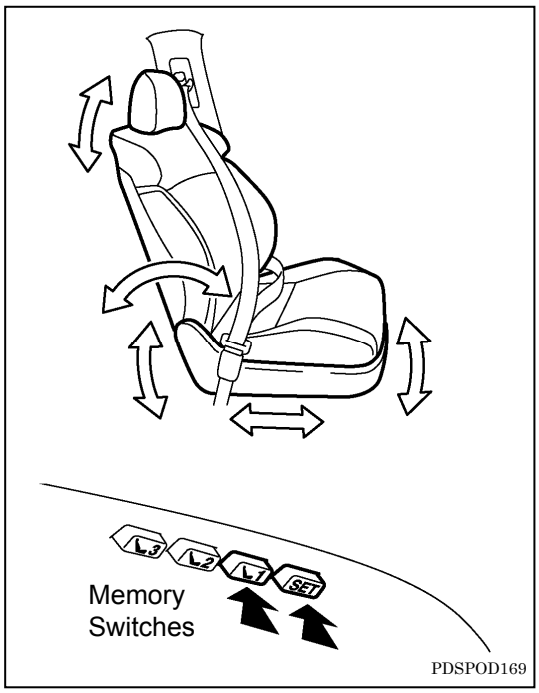

b) Seat position memory system*
   1. While pressing the “SET” button, press the button “1”, “2” or “3” until the beep sounds.
   2. Press the seat position adjustment switch and move the seat a little from the position previously set in the procedure “1.”.
   3. Press the button (“1”, “2” or “3”) that has been set in the procedure “1.” and check that the seat is adjusted to the position that has been set in the procedure “1.”.

*: Inspect or install when equipped/required.

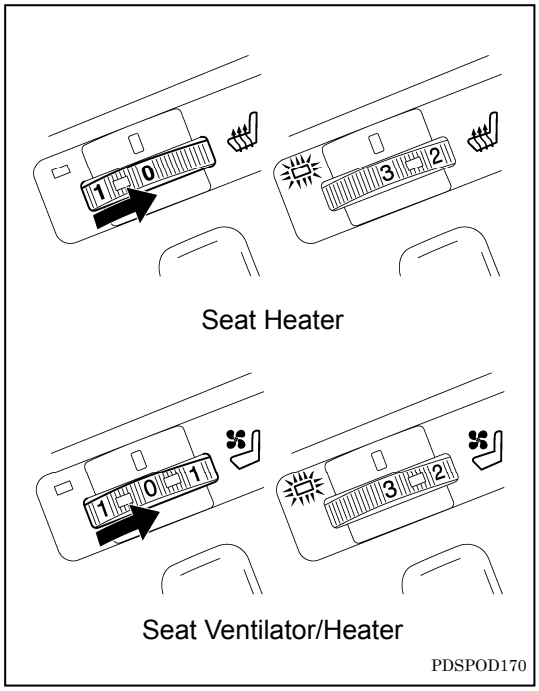

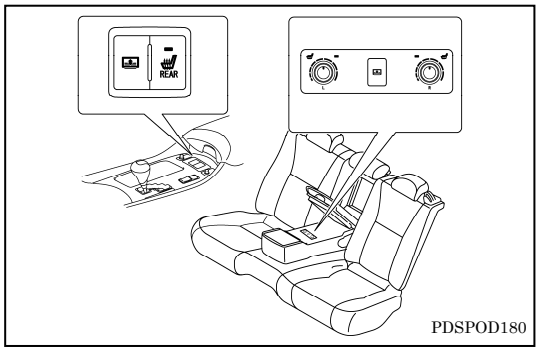

c) Seat heater and ventilator*:
   1. Check that the indicator light illuminates properly when the switch is turned ON.
   2. Physically check the operation of the seat heater and ventilator for any troubles. Also, check for any abnormal noise.
   3. Turn the switch again and the light goes off after testing.

D44. CHECK LUGGAGE COMPARTMENT DOOR OPENER AND FUEL FILLER DOOR OPENER

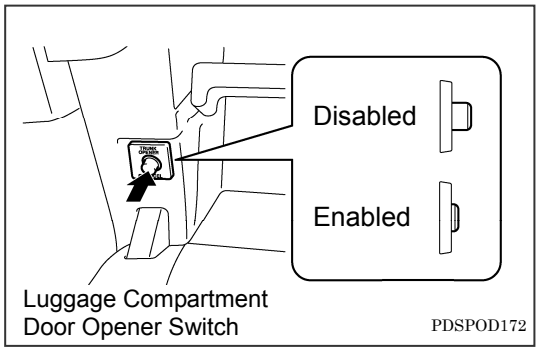

a) Luggage compartment door opener
   - Without lock:
     Check that the luggage compartment door pops up and operates smoothly when the luggage compartment door opener lever is pulled or the switchis turned ON.
   - Electrical type with lock:
   1. Turn the luggage compartment door main switch to the enabled position.
   2. Check that the luggage compartment door does not unlock by pressing the luggage compartment door opener switch.
   3. Turn the luggage compartment door main switch to the disabled position.

*: Inspect or install when equipped/required.

4. Press the luggage compartment door opener switch and check that the luggage compartment door pops up and operates smoothly.

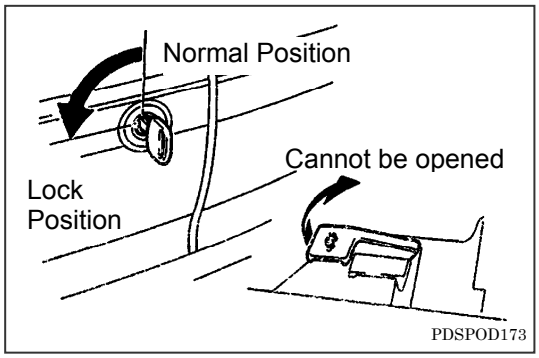

- Wire type with lock:

1. Turn the key in the key cylinder on the luggage compartment door to the lock position.
2. Check that the luggage compartment door does not unlock by pulling the luggage compartment door opener lever.
3. Turn the key in the key cylinder to the normal position.
4. Operate the luggage compartment door opener lever and check that the luggage compartment door pops up and operates smoothly.

b) Fuel filler door opener:

1. Operate the fuel filler door opener lever or switch and check that the fuel filler door opens.

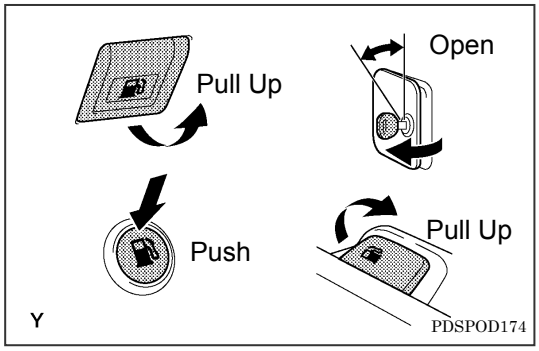

2. Remove the cap and check for damage. Put the cap back on and turn the fuel tank cap until a clicking sound is heard.

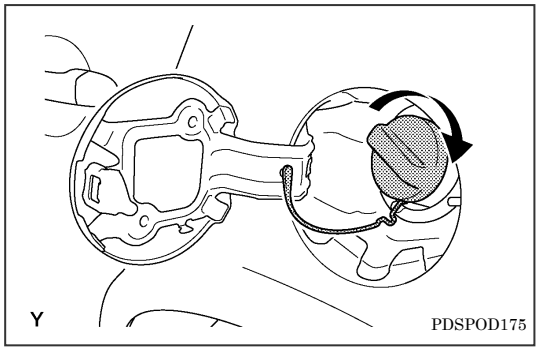

D45. CHECK DOOR, DOOR HANDLE AND DOOR LOCK

► See page 37 (D02.).

D46. CHECK INTERIOR PARTS FOR DIRT, DAMAGE AND PROPER FIT AND ALIGNMENT

► See page 43 (D06.).

D47. CHECK SEAT

► See page 73 (D43.).

D48. CHECK SEAT BELT

► See page 72 (D42.).

D49. CHECK ACCESSORY BOXES

► See page 64 (D33.).

D50. CHECK DOOR, DOOR HANDLE AND DOOR LOCK

► See page 37 (D02.).

D51. CHECK INTERIOR PARTS FOR DIRT, DAMAGE AND PROPER FIT AND ALIGNMENT

► See page 43 (D06.).

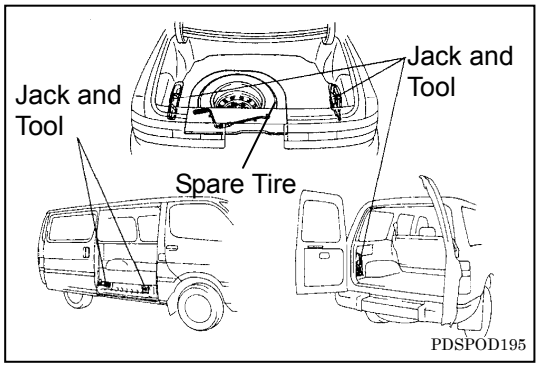

D52. CHECK FOR ON-VEHICLE ITEMS IN LUGGAGE COMPARTMENT

Check all the on-vehicle items that should be provided in the luggage compartment. For example, check for a missing item, a wrong item or a damaged item.

- Spare tire
- Tools, jack and jack handle
- Luggage cover/mat
- Net*
- First aid kit*
- Other items

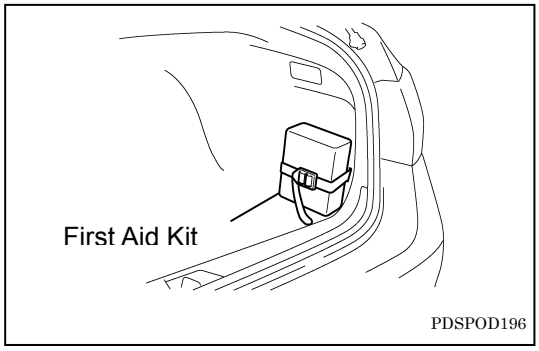

D53. CHECK FUNCTIONS IN LUGGAGE COMPARTMENT

a) Luggage compartment light:
When the luggage compartment door is open, check that the luggage compartment light illuminates.

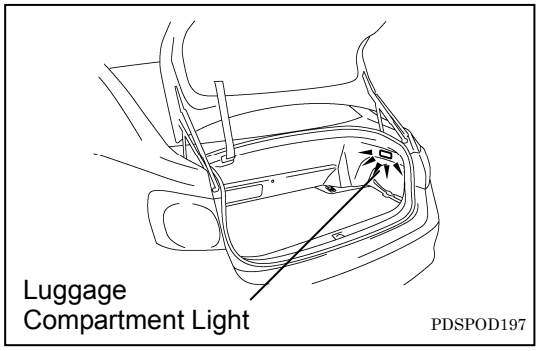

*: Inspect or install when equipped/required.

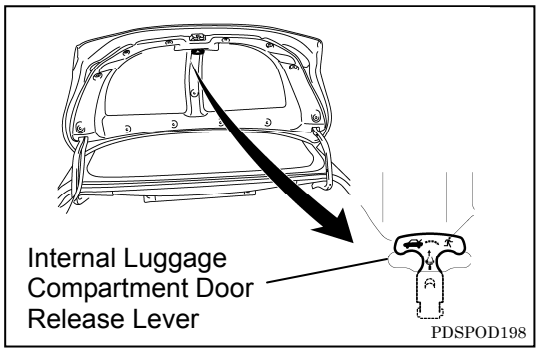

b) Internal luggage compartment door release lever*:
Check that the internal luggage compartment door release lever operates properly.

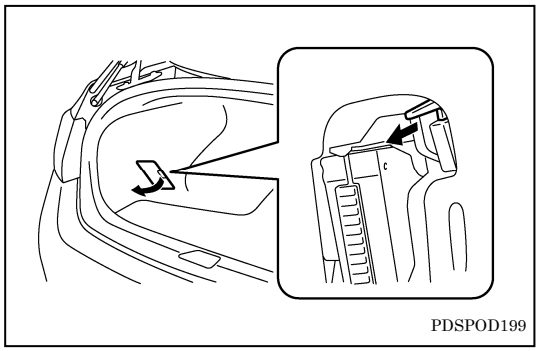

c) Manual fuel filler door lever*:
Check for proper operation of the manual fuel filler door lever.

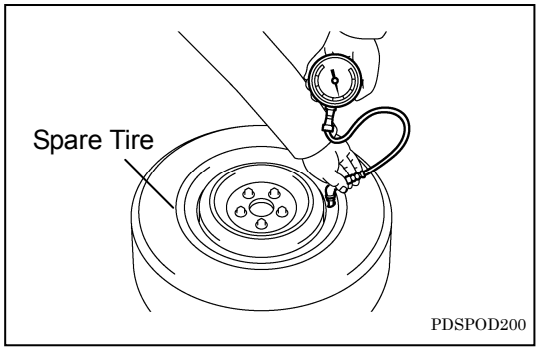

D54. CHECK AND ADJUST TIRE INFRATION PRESSURE (ALL TIRES)

Check and adjust inflation pressure to specification.

NOTICE:
Check only when the tires are cold.

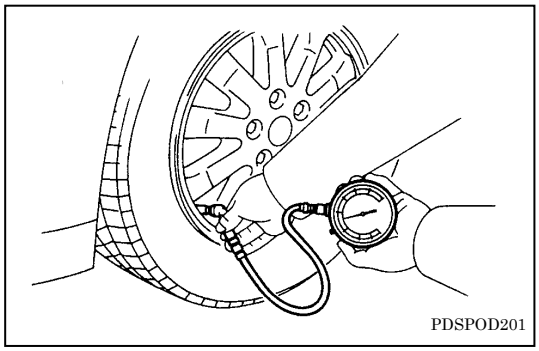

D55. CHECK DOOR, DOOR HANDLE AND DOOR LOCK

► See page 37 (D02.).

*: Inspect or install when equipped/required.

D56. CHECK INTERIOR PARTS FOR DIRT, DAMAGE AND PROPER FIT AND ALIGNMENT

► See page 43 (D06.).

D57. CHECK SEAT

► See page 73 (D43.).

D58. CHECK SEAT BELT

► See page 72 (D42.).

D59. CHECK ACCESSORY BOXES

► See page 64 (D33.).

D60. CHECK DOOR, DOOR HANDLE AND DOOR LOCK

► See page 37 (D02.).

D61. CHECK INTERIOR PARTS FOR DIRT, DAMAGE AND PROPER FIT AND ALIGNMENT

► See page 43 (D06.).

D62. CHECK ACCESSORY BOXES

► See page 64 (D33.).

D63. CHECK SUN VISOR AND VANITY MIRROR

► See page 69 (D36.).

D64. CHECK INTERIOR LIGHTS

► See page 71 (D39.).

D65. CHECK SEAT BELT

► See page 72 (D42.).

D66. CHECK SEAT

► See page 73 (D43.).

E. UNDER VEHICLE

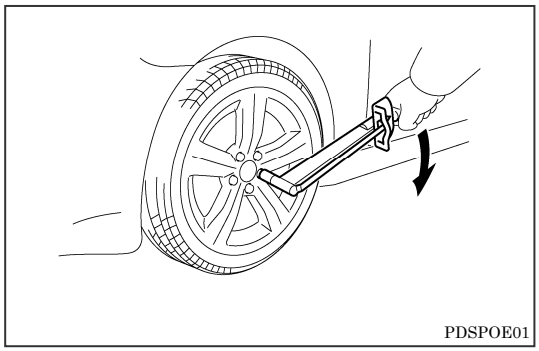

E01. CHECK TORQUE OF WHEEL LUG NUT

Using a torque wrench, make sure the lug nuts on all the wheels are tightened to the specified torque.

LIFT UP

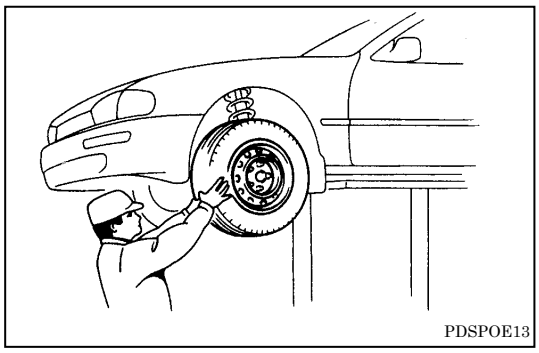

E02. CHECK TIRES FOR DEFECTS AND DAMAGE

Visually check all tires for defects and/or damage.

E03. REMOVE AND INSTALL FACTORY-LOADED PARTS

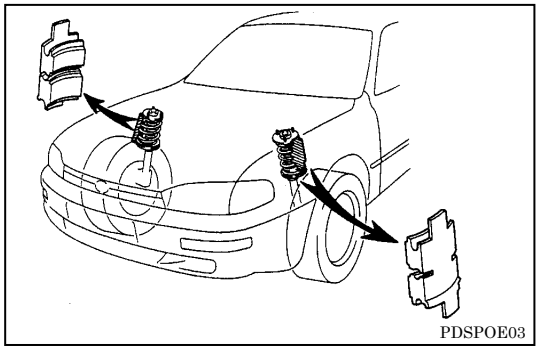

a) Remove parts
- Front spring spacers
- Other parts

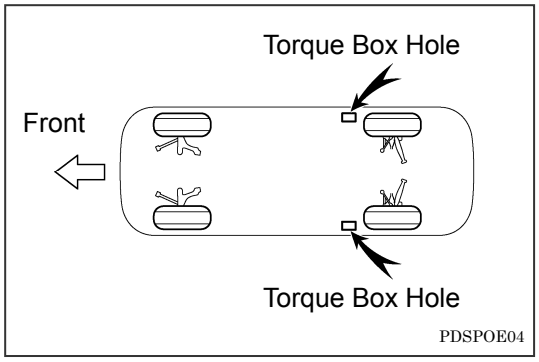

b) Install parts
- Rubber body plugs
- Front and rear spoilers
- Spats
- Other parts

E04. CHECK UNDER-VEHICLE PARTS FOR DAMAGE AND PROPER TIGHTNESS AND FIT

Check the tightness of bolts and nuts on the chassis and power train.

a) Front suspension

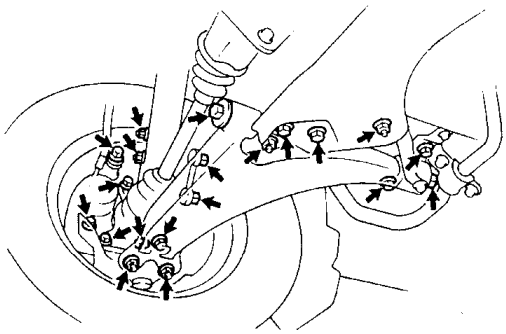

FF MacPherson Strut Type

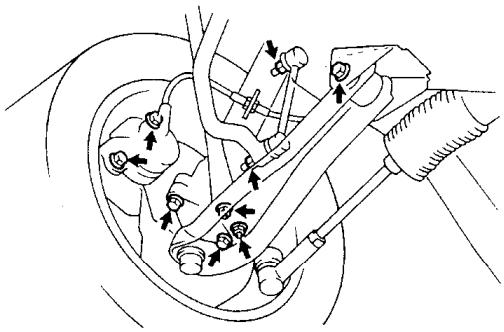

FR MacPherson Strut Type

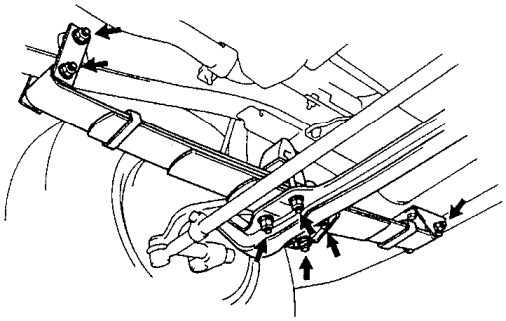

Leaf Spring Rigid Type

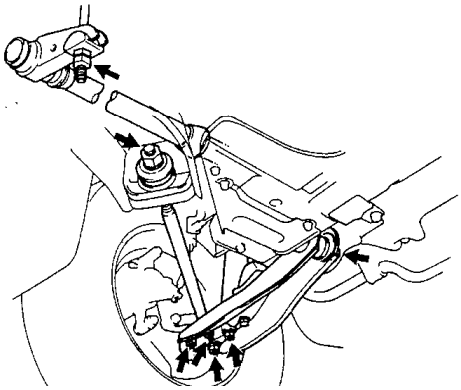

Double Wishbone Type with Torsion Bar Spring

PDSPOE05

b) Rear suspension

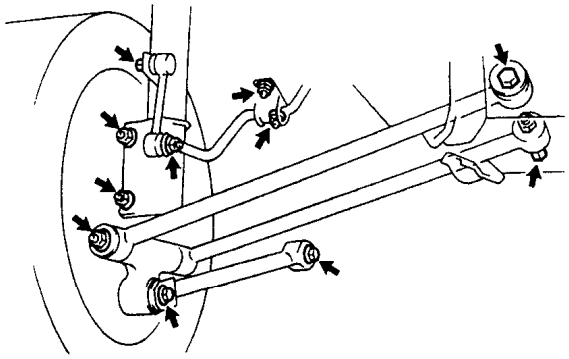

FF MacPherson Strut Type

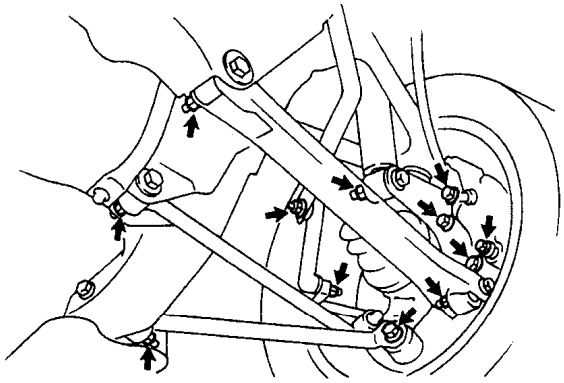

FR MacPherson Strut Type

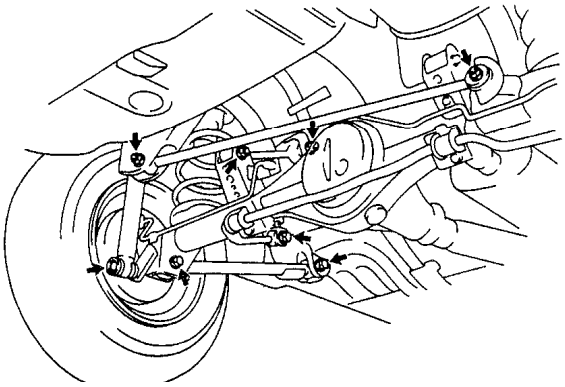

4-link Rigid Type

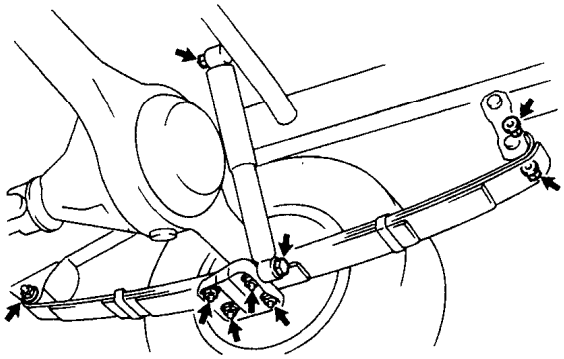

Leaf Spring Rigid Type

PDSPOE06

c) Steering linkage

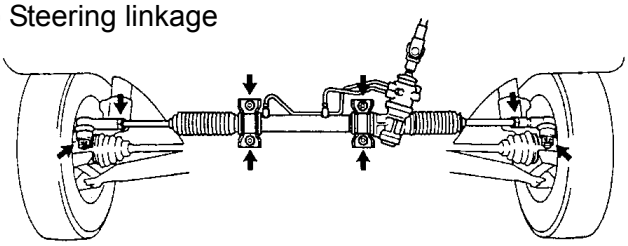

Rack and Pinion Type

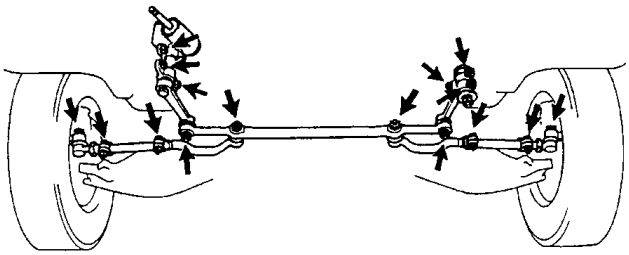

Recirculating Ball Type

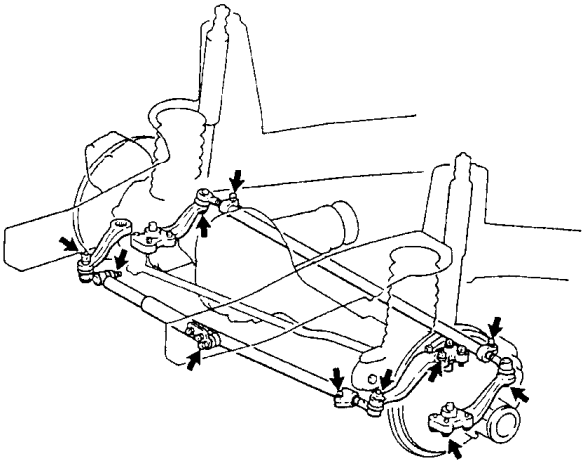

Rigid Axle Type

PDSPOE07

d) Power train

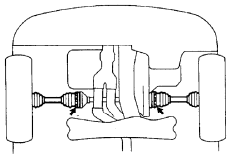

FF Type

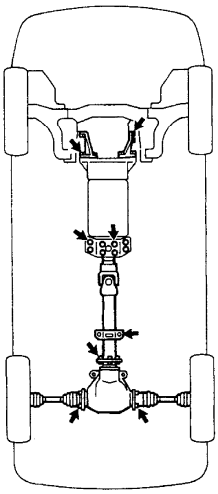

FR Type

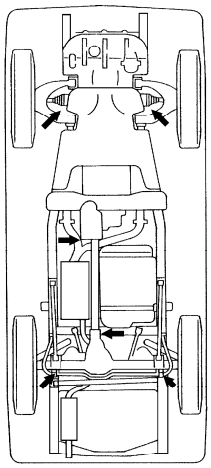

4WD Type

PDSPOE08

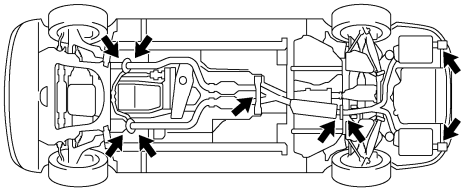

PDSPOE09

e) Exhaust system
f) Other parts
- Floor panel
- Wiring, pipe fitting
- Parking brake cable

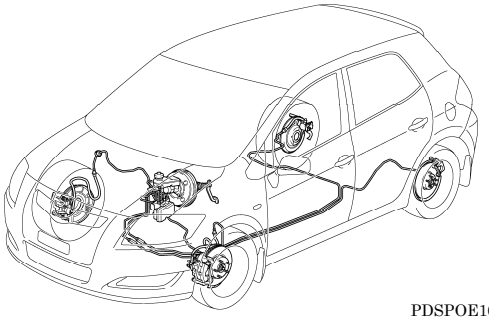

PDSPOE10

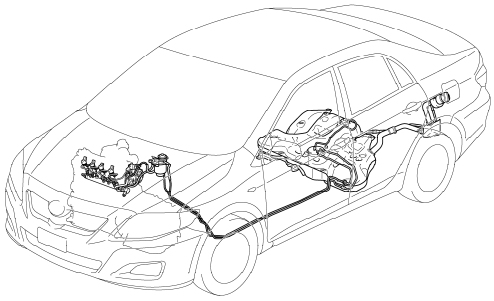

PDSPOE11

E05. CHECK FOR FUEL, OIL, COOLANT OR OTHER FLUID LEAKS

Visually check the following components for fluid leaks.
- Brake pipe line
- Fuel pipe line
- Engine
- Transmission, transaxle
- Steering gear box
- Power steering pipe line
- Rear axle
- Shock absorbers
- Differential
- AHC (Active Height Control)
- Other parts

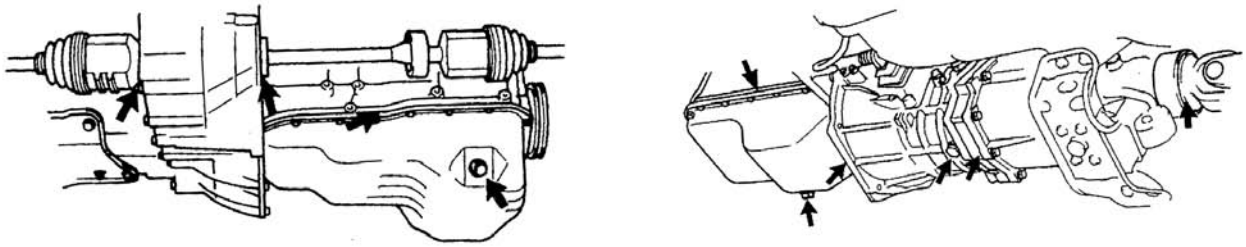

Engine and Transmission

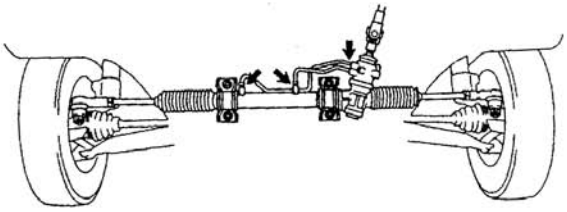

Steering Gear Box

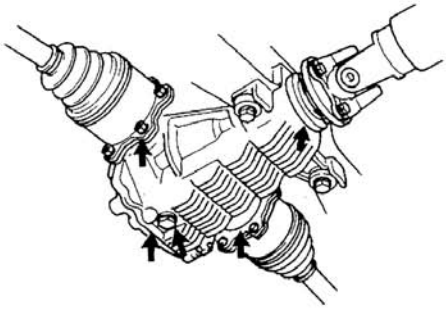

Differential

PDSPOE12

LOWER VEHICLE

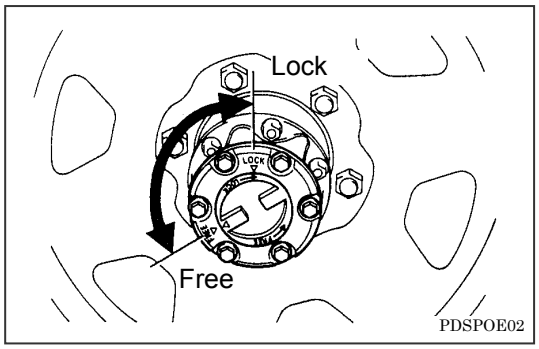

E06. CHECK OTHER ITEMS*

E06-1. CHECK FREE WHEELING HUB

Check that the free wheeling hub handle moves smoothly.

- Free wheeling hub
- D-LAH (DUAL AUTOMATIC LOCKING HUB)

*: Inspect or install when equipped/required.

F. ROAD TEST

F01. CHECK BRAKE PEDAL AND CLUTCH PEDAL FOR PROPER HEIGHT, FREE PLAY AND RESERVE DISTANCE

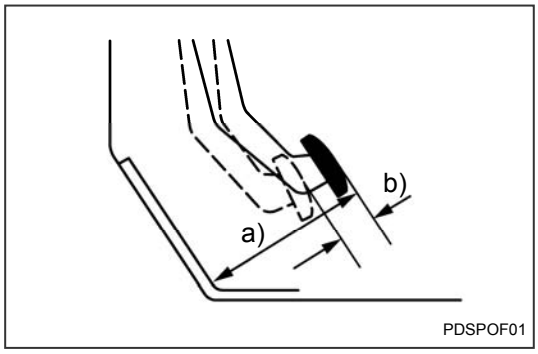

Operate the brake pedal and clutch pedal and check the following items.

a) Pedal height
b) Pedal freeplay
c) Break pedal reserve distance

HINT:
For details, refer to the Repair Manual.

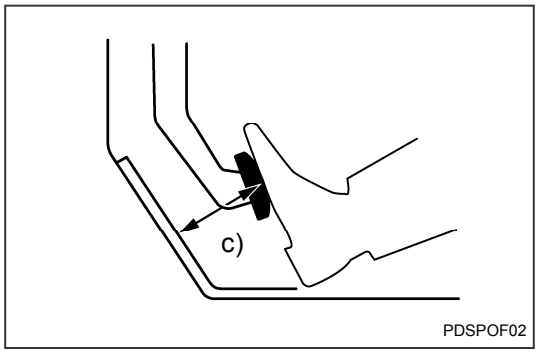

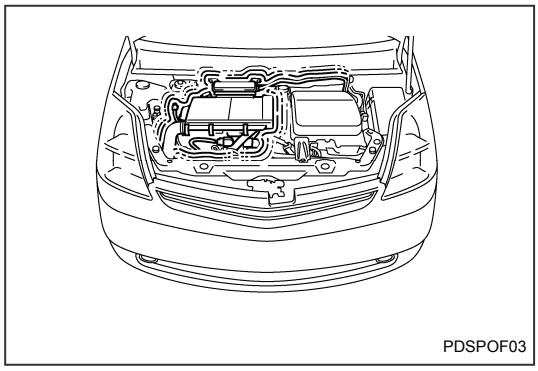

F02. CHECK ENGINE (HYBRID SYSTEM) OPERATION

a) Starting performance:
Perform the cranking operation and check the operation of the starter and the starting performance.
b) Stability:
Check the idling condition, engine speed, operation of the accelerator pedal, response and stability. Also, check for abnormal noise, abnormal vibration and exhaust leaks.

F03. CHECK COMBINATION METER

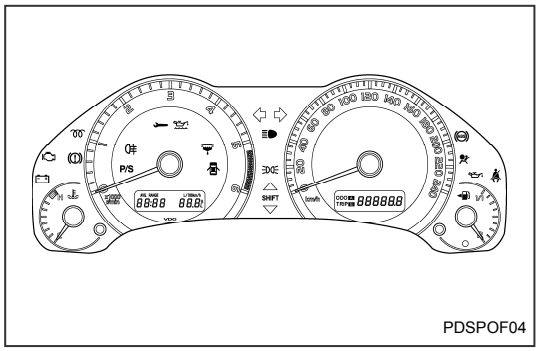

PDSPOF04

Check that the meters and gauges operate properly and move smoothly.

Inspect while vehicle stopped:

- Tachometer
- Odometer, trip meter
- Switching between km/h and MPH
- Engine coolant temperature gauge
- Engine oil pressure gauge
- Fuel gauge
- Multi-information display*
- Trip meter
- Accessory meter
- Voltmeter

Inspect while driving:

- Speedometer
- Instantaneous fuel consumption*
- Current fuel consumption*
- Power meter (HV)*
- ECO drive indicator light or meter*
- Other meters

F04. CHECK BRAKE, CLUTCH AND PARKING BRAKE OPERATION

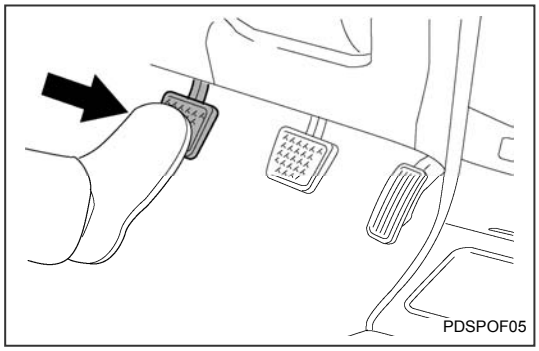
PDSPOF05

a) Clutch:
The clutch should disengage smoothly and be free of chattering and abnormal noise.

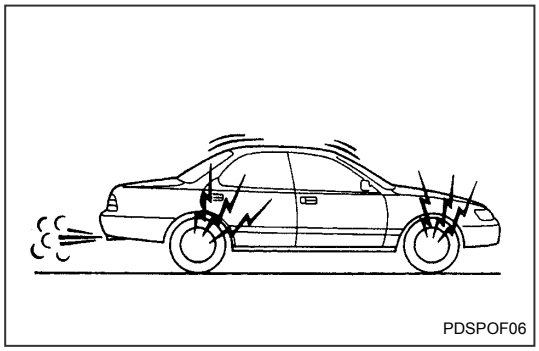
PDSPOF06

b) Foot brake:
Check the brake effort. Also, check for a pull to one side and an abnormal squeak.

*: Inspect or install when equipped/required.

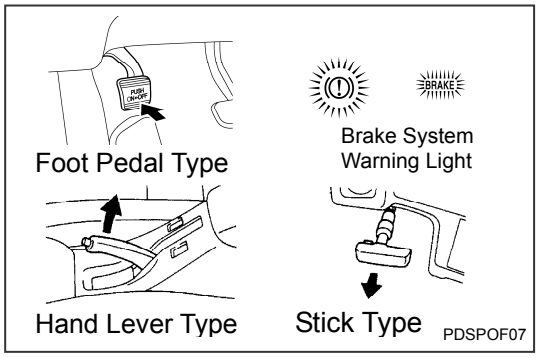

c) Parking brake:
Check that the parking brake operates smoothly and properly. Also, check that the brake system warning light illuminates properly.
- Foot pedal type parking brake
- Hand lever type parking brake
- Stick-type parking brake

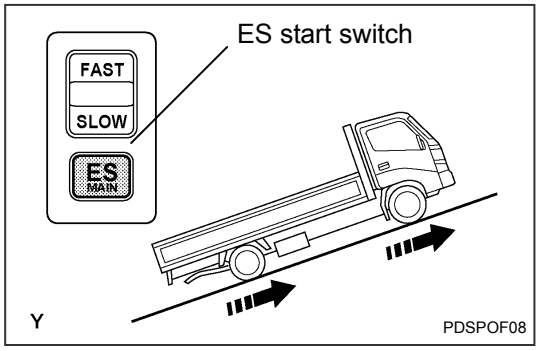

d) ES (EASY and SMOOTH) starting*:

NOTICE:
Check behind the vehicle.

1. Stop the vehicle on a slope.
2. Check that the ES start indicator light illuminates when turning the ES start switch ON.
3. Select the ES start timing (FAST/NORMAL/SLOW).
4. Check that the brake is properly applied when releasing the brake pedal.

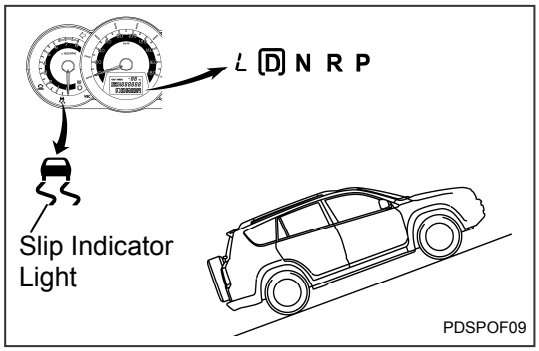

e) Hill-start assist control*:

NOTICE:
Check behind the vehicle.

1. Stop the vehicle on a slope.
2. Move the shift lever to the position to move the vehicle forward (other than “P”, “R” or “N” position).
3. Release the brake pedal and check that the brake is applied, the slip indicator light blinks and the buzzer sounds intermittently.

*: Inspect or install when equipped/required.

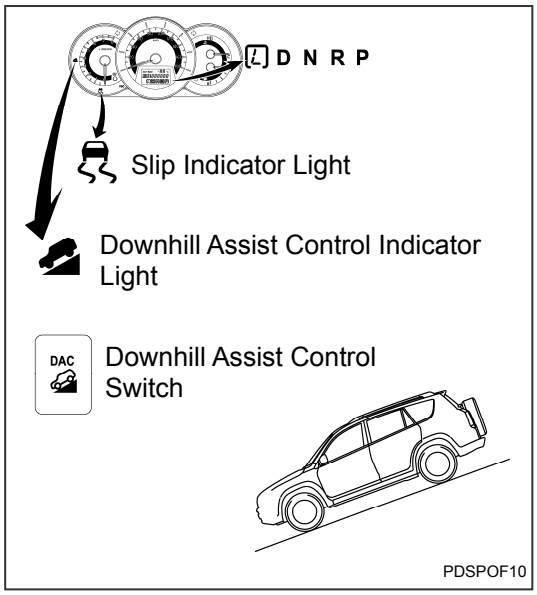

f) Downhill assist control*:
   1. Move the four-wheel drive control lever to the “L” position.
   2. Move the shift lever to the “L” position.
   3. Check that the downhill assist control indicator light illuminates when turning the downhill assist control switch ON.
   4. Run on a downhill slope with the accelerator pedal and the brake pedal released and check that the brake is applied and the slip indicator light blinks during braking.

HINT:

- While the downhill assist control is operating, the downhill assist control indicator light illuminates.
- When the downhill assist control indicator light blinks with the vehicle stopped, it means that the shift lever position is not appropriate.
- When the downhill assist control indicator light blinks with the vehicle running, it means that the vehicle speed exceeds 25 km/h (16 mph).

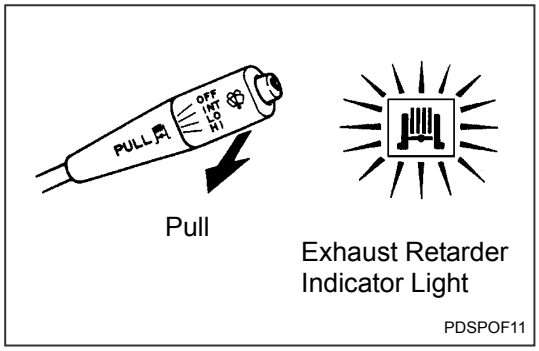

g) Exhaust retarder (brake)*:
   Turn the exhaust retarder switch (lever) ON with the vehicle running and check that the exhaust retarder indicator light illuminates and the exhaust retarder operates.

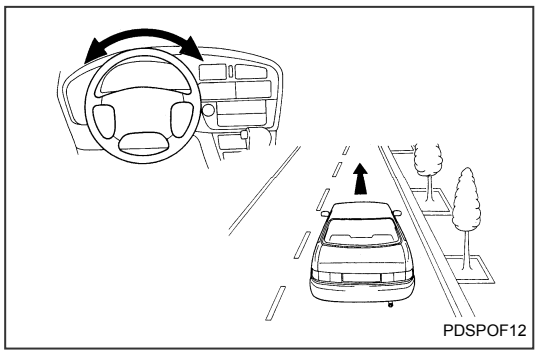

F05. CHECK STEERING OPERATION AND OFF-CENTER

1. Check for smooth turning operation and unusual noise.
2. Check for a pull to one side when driving on a level road surface.
3. Check that the steering wheel is correctly aligned when driving on a level road surface.

*: Inspect or install when equipped/required.

F06. CHECK TRANSMISSION/TRANSAXLE OPERATION

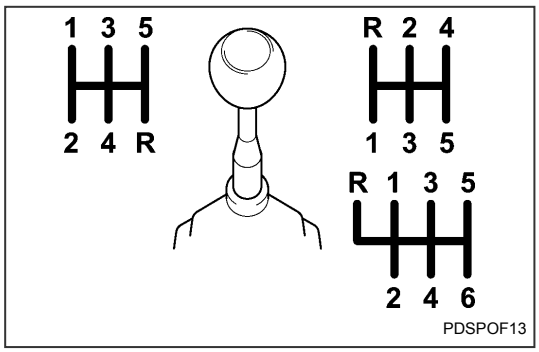

a) Manual transmission/transaxle:
Move the shift lever to each position and check the operation for any troubles.
(In some vehicles, the warning buzzer sounds when the shift lever is moved to the “R” position.)

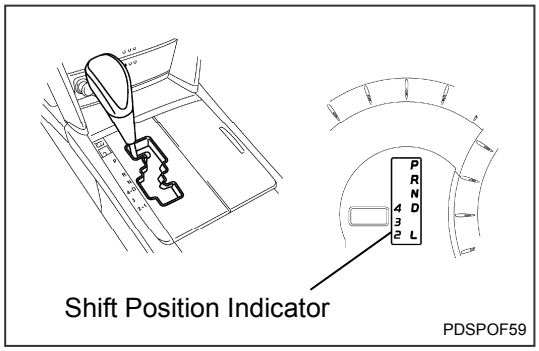

b) Automatic transmission/transaxle:
Move the shift lever to each position and check the operation for any troubles.
Also, check that the warning buzzer sounds when the shift lever is moved to the “R” position.

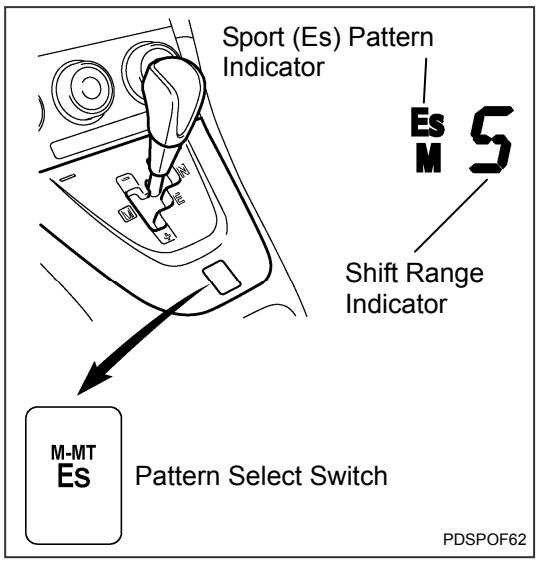

c) Multi-mode manual transmission/transaxle*:
1. Check that the gear is automatically selected depending on the operation of the accelerator pedal and the vehicle speed after shifting to the “E” position.
2. Press the pattern select switch and check that the driving pattern switches to the easy sport (Es) mode and the sport (Es) pattern indicator illuminates.
3. Operate the shift lever (shift paddle switch) to change the gear after shifting to the “M” position and check the operation for any troubles. Also, check that the shift range indicator is displayed properly.

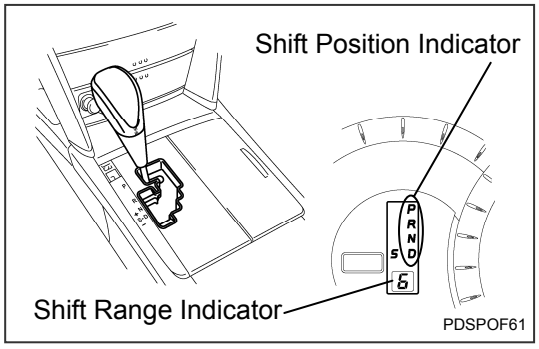

d) Multi-mode automatic transmission/transaxle*:
1. Check that the gear is automatically selected depending on the operation of the accelerator pedal and the vehicle speed after shifting to the “D” position.
2. Operate the shift lever (shift paddle switch) to change the gear after shifting to the “S” position and check the operation for any troubles. Also, check that the shift range indicator is displayed properly.

*: Inspect or install when equipped/required.

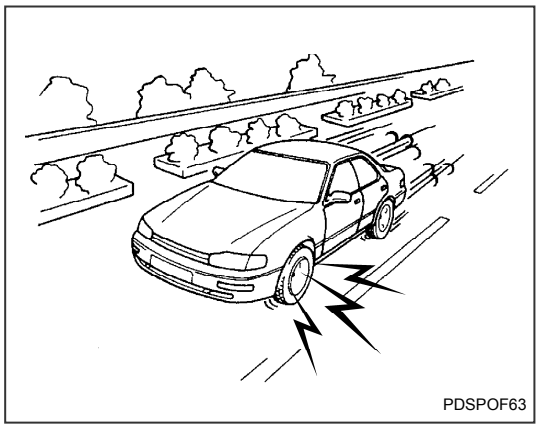

F07. CHECK FOR ANY ABNORMAL NOISE OR VIBRATION

Check for vibration or abnormal noise while the vehicle is in motion.

- Wind noise
- Power train (engine, transmission/transaxle, transfar, differential, propeller shaft)
- Road noise (tires)
- Instrument panel
- Doors
- Trim
- Body
- Other parts

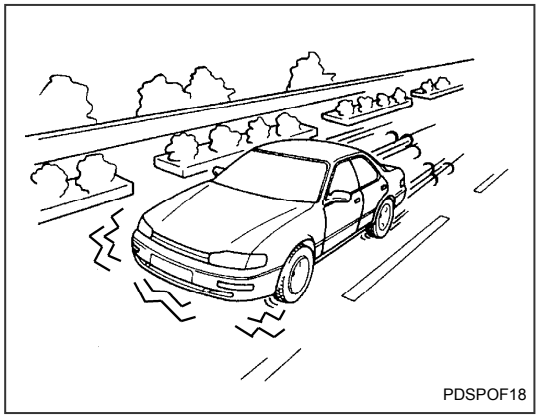

F08. CHECK DRIVING PERFORMANCE AND DRIVABILITY

1. Check engine performance over a broad range of driving conditions, including acceleration, cruising and deceleration.
2. Check that the engine operation is normal, smooth and responsive.

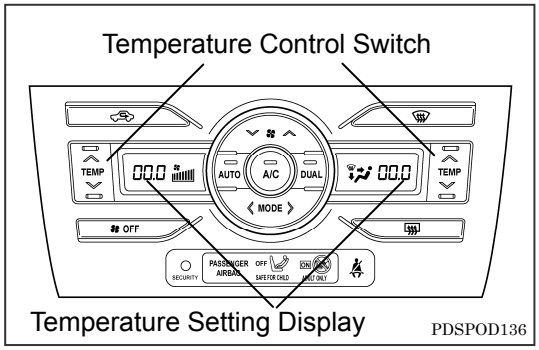

F09. CHECK HEATING SYSTEM

1. Set the temperature to the highest setting and operate the heating system.
2. Check that warm air is coming from the air outlets.

F10. CHECK OTHER ITEMS*

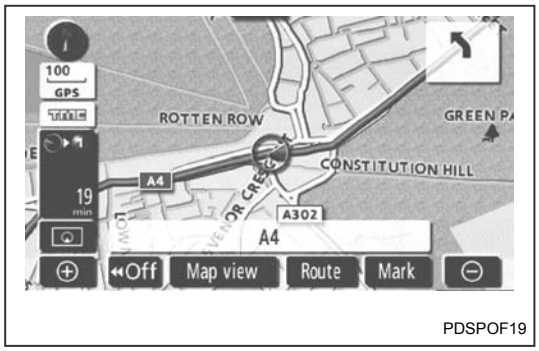

F10-1. CHECK NAVIGATION SYSTEM

Check that the current vehicle position mark always appears on the map and check that it responds properly to each operation.

- “MAP” button operation
- Scroll operation
- Magnifying and reducing operations of the map scale

*: Inspect or install when equipped/required.

F10-2. CHECK CRUISE CONTROL SYSTEM

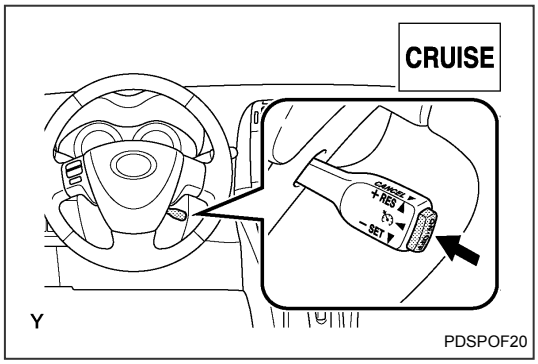

a) Set the vehicle speed:
   1. Turn the “ON-OFF” button ON and check that the cruise control indicator light illuminates.

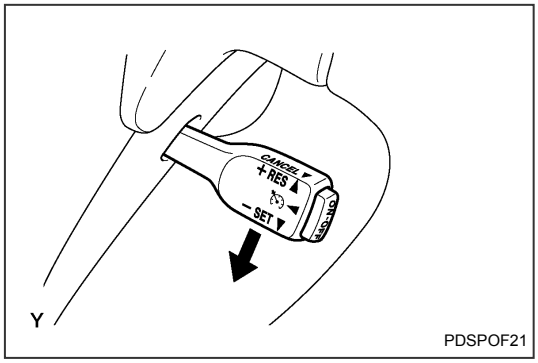

   2. Perform the “SET” operation while driving at 40 km/h (25 mph) or more and check that the cruise control speed can be set to the desired speed.

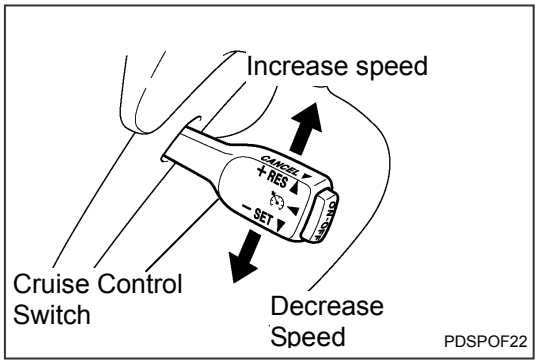

b) Adjusting the speed setting:
   Operate the cruise control switch while driving at the desired speed and check that the vehicle speed increases and decreases.

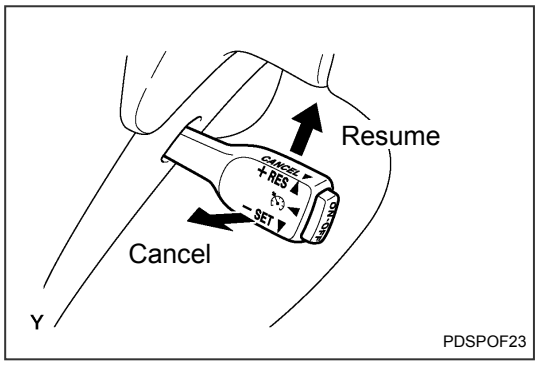

c) Canceling and resuming regular acceleration:
   Perform the following operations while driving at the desired speed and check that the cruise control mode is canceled and resumes.
   - Depress the brake pedal.
   - Depress the clutch pedal.
   - Change the gear.
   - Operate the parking lever.
   - Operate the cruise control switch.
   - Operate the “ON-OFF” button.

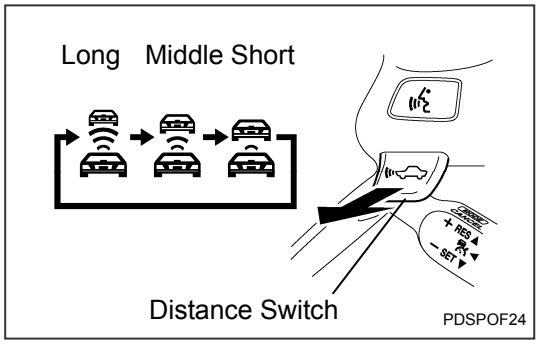

d) Dynamic radar cruise control system:
Operate the distance switch and check that the vehicle-to-vehicle distance setting changes as follows: “Long”, “Middle”, “Short” and then back to “Long”.

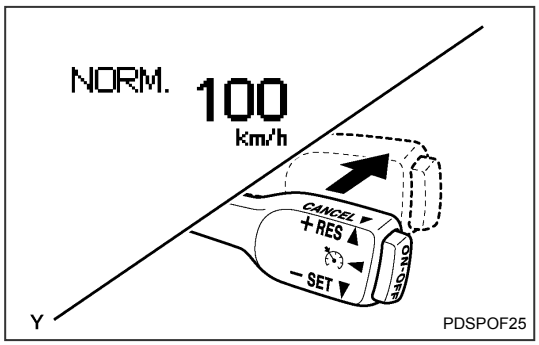

e) Mode change:
Operate the cruise control switch for approximately 1 second and check that the “RADAR” display turns OFF and the mode changes to the constant speed control mode.

HINT:
In the constant speed control mode, “NORM.” is displayed.

F10-3. CHECK SPEED LIMITER

a) Set the vehicle speed
1. Turn the speed limiter switch ON.

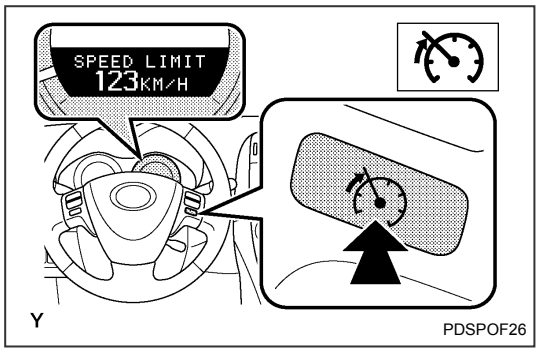

2. Accelerate or decelerate to the desired speed and check that the maximum speed can be set by pushing the lever down.

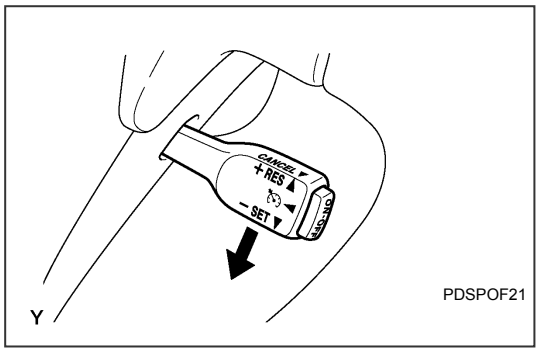

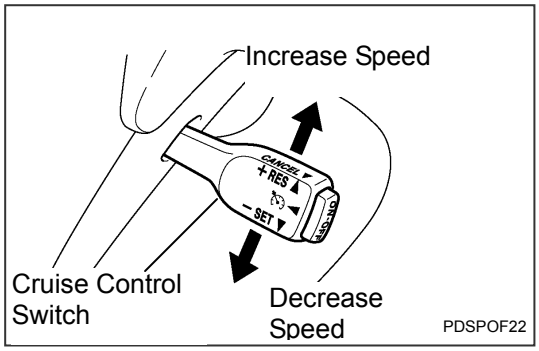

b) Adjusting the speed setting:
Operate the cruise control switch while driving at the desired speed and check that the vehicle speed increases and decreases.

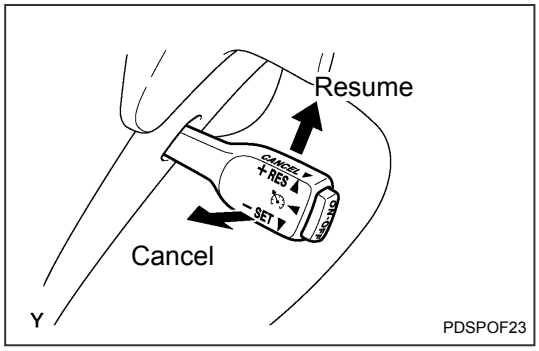

c) Canceling and resuming regular acceleration:
1. Pull the lever towards you and check that the speed limiter control is canceled.
2. Push the lever up and check that the speed limiter control resumes.

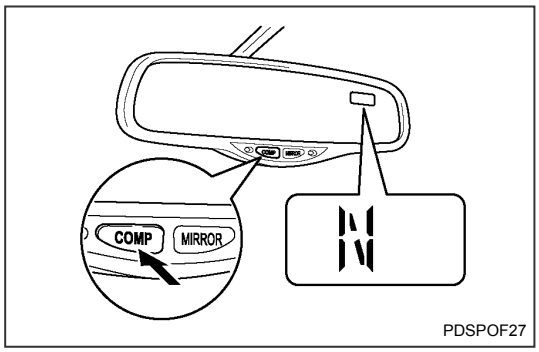

F10-4. CHECK COMPASS

1. Press the “COMP” switch and check that the direction (N, NE, E, SE, S, SW, W or NW) appears on the compass display.
2. Check that the direction of the vehicle is always displayed while the vehicle is running.

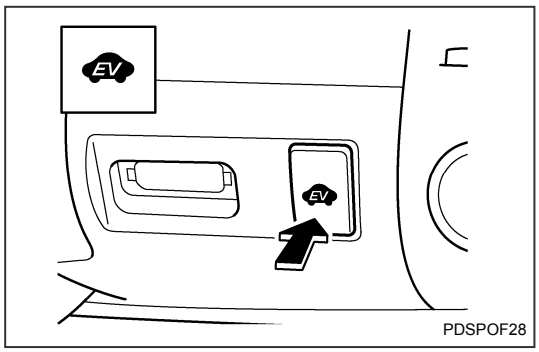

F10-5. CHECK EV DRIVE MODE

1. Turn the EV drive mode switch ON and check that the EV drive mode indicator light illuminates.
2. Check the driving condition.
3. Turn the EV drive mode switch OFF and check that the EV drive mode indicator light turns OFF.

HINT:

- The EV drive mode may not switch between ON and OFF in some vehicle conditions.
- The EV drive mode may automatically be canceled.

F10-6. CHECK DIFFERENTIAL LOCK

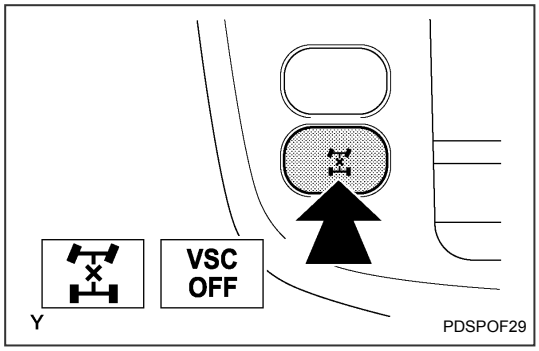

a) Center differential lock:
   1. Move the four-wheel drive control lever to the “L” position.
   2. Operate the center differential lock/unlock switch and check that the center differential lock indicator light and the “VSC OFF” indicator light illuminate.

HINT:
The indicator lights blink while the vehicle is shifting to the center differential lock condition and illuminate after the shifting has been completed.

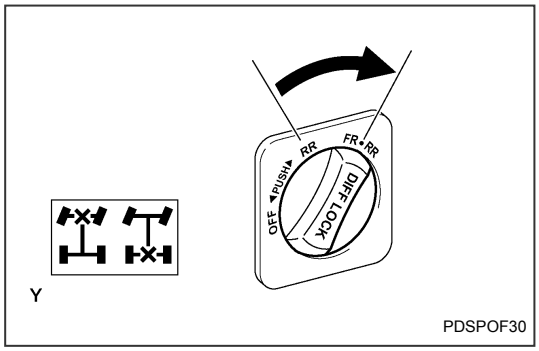

b) Front and rear differential lock:
   1. Move the four-wheel drive control lever to the “L” position.
   2. Operate the front and rear differential lock/unlock switch and check that the front (rear) differential lock indicator light illuminates.

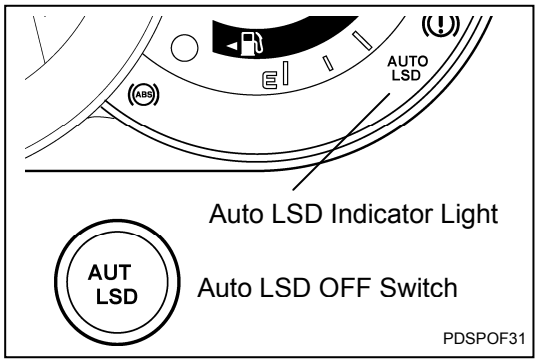

c) Auto LSD:
   Operate the Auto LSD OFF switch and check that the Auto LSD indicator light illuminates.

F10-7. CHECK TRANSFER

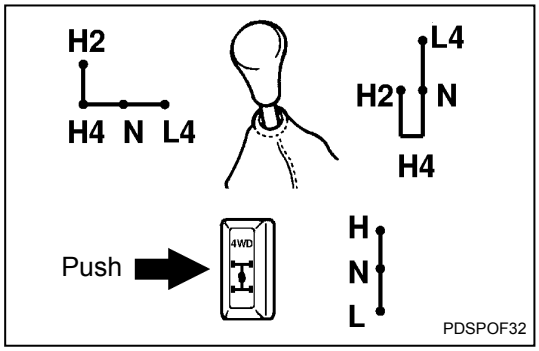

a) Transfer:
   Check that the four-wheel drive control lever or switch operates smoothly and properly. Also, check that the indicator operates properly.

HINT:
When the transfer is in the “N” position, the A/T P (parking) warning light illuminates.
- Transfer (H2, H4, L4 and N)
- PTO (lever or switch type)

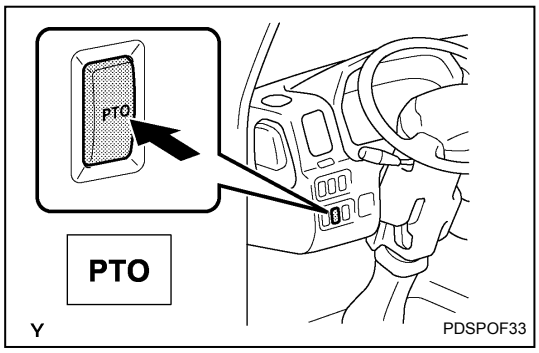

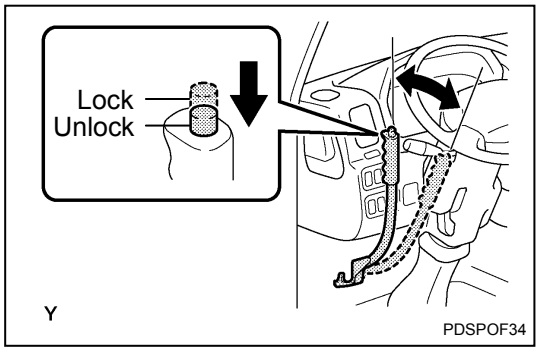

b) Power take-off system:
   1. Operate the power take-off control switch (lever) and check that the power take-off system operates properly.
   2. Press the power take-off control switch and check that the indicator light illuminates.

G. FINAL INSPECTION

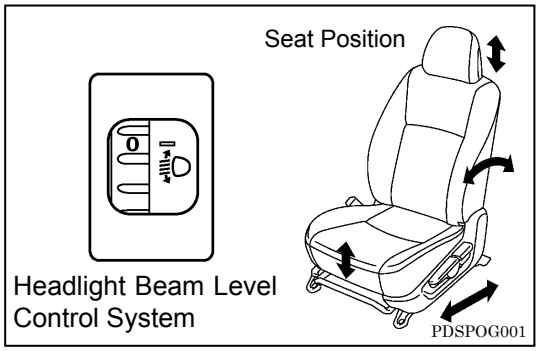

G01. PRESET CHECKED ITEMS

Preset the following checked items to the normal positions to provide the customer with the best driving conditions.

- ECT (Electronically Controlled Transmission)
- Headlight beam level control system
- Door lock, child protector lock
- Steering wheel position
- Power window lock
- Seat position
- Other items

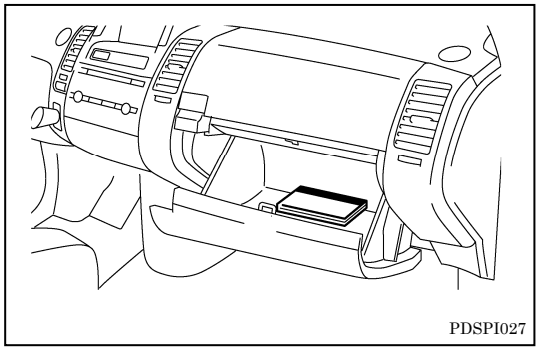

G02. CHECK FOR ALL ON-VEHICLE ITEMS

Check the on-vehicle items for a missing item, a wrong item and a damaged item.

- Toyota warranty booklet
- Owner's manual
- Other on-vehicle materials

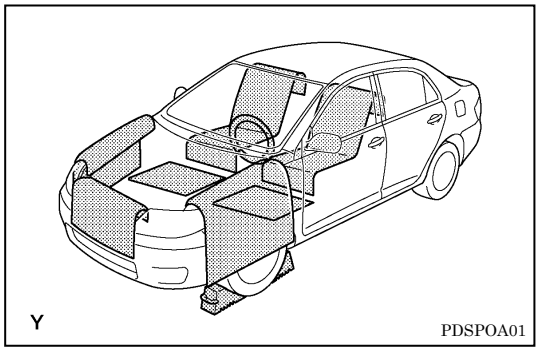

G03. REMOVE INTERIOR PROTECTIVE COVERS

Remove the protective covers that you set before the check (A01.).

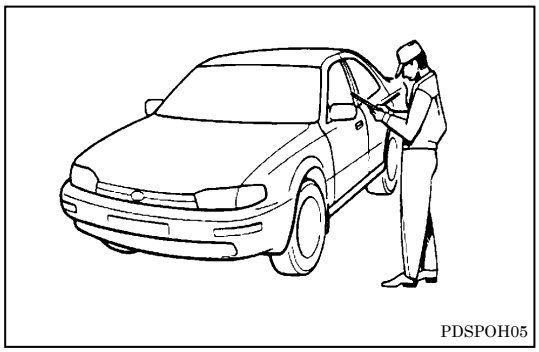

G04. COMPLETE AND SIGN PDS CHECK SHEET

Check that all of the check boxes of the appropriate PDS items have been checked and sign the PDS check sheet.

5. VEHICLE DELIVERY INSPECTION

		Page
01.	FILL UP FUEL TANK…….……..……..	98
02.	CHECK ENGINE COMPARTMENT……	98
03.	CHECK ENGINE (HYBRID SYSTEM) STARTING PERFORMANCE AND PRESET ELECTRICAL COMPONENTS…….	98
04.	REMOVE AND INSTALL FACTORY-LOADED PARTS...	99
05.	CHECK ON-VEHICLE ITEMS……....……...	100
06.	WASH AND CLEAN VEHICLE……	100
07.	CHECK EXTERIOR AND INTERIOR PARTS….……..	100
08.	FINAL CONFIRMATION……...	100

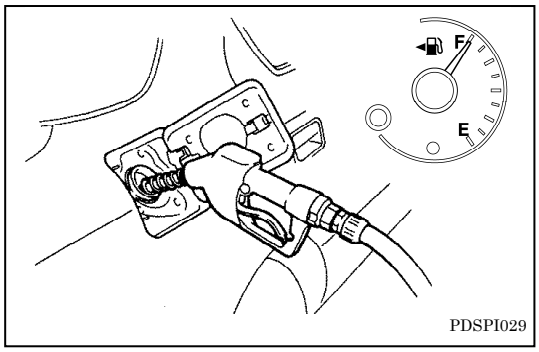

01. FILL UP FUEL TANK

Fill the fuel tank to the “FULL” level with the fuel suitable for the vehicle.
Check that the fuel indicator shows “Full”.

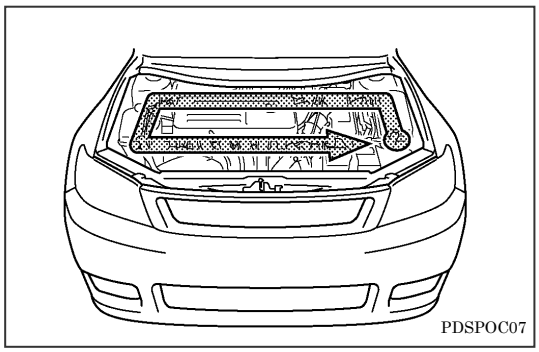

02. CHECK ENGINE COMPARTMENT

1. Check the following parts for proper fit and tightness.
   - Fuse (Short Pin)
   - Battery bracket
   - Battery terminal

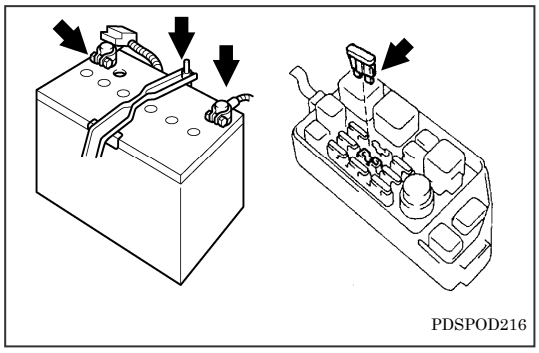

03. CHECK ENGINE (HYBRID SYSTEM) STARTING PERFORMANCE AND PRESET ELECTRICAL COMPONENTS

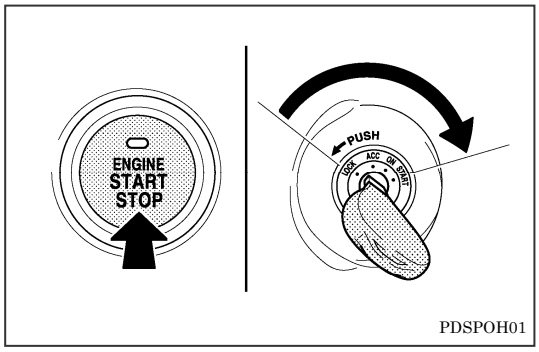

1. Start the engine (hybrid system) and check its starting performance.

HINT:
If any problem such as a poor battery is found, it should be charged.

NOTICE:
If the vehicle is stored over one month, check the battery remaining capacity.

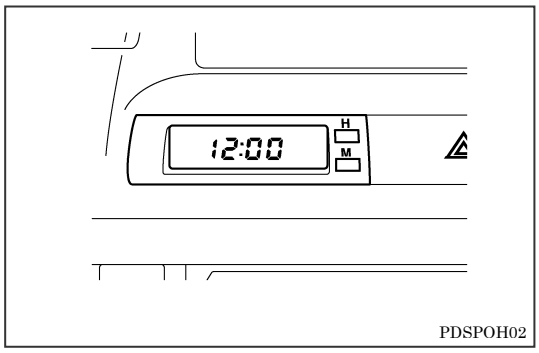

2. Preset the following items:
   - Audio
   - Clock
   - Seat position
   - Steering wheel position
   - Other items

04. REMOVE AND INSTALL FACTORY-LOADED PARTS

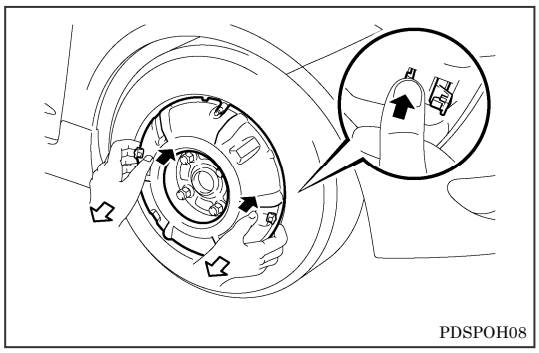

1. Remove any unnecessary labels, tags, stickers and protective covers.
   - Seat cover
   - Door trim cover
   - Sun visor cover
   - Step cover
   - Plastic door edge protectors
   - Floor carpet protection covers (papers)
   - Wheel film (disc brake, anti rust cover)
   - Other covers

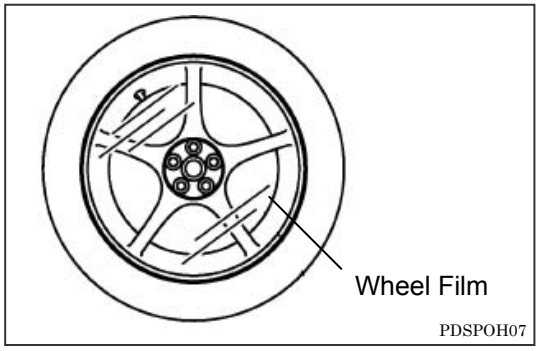

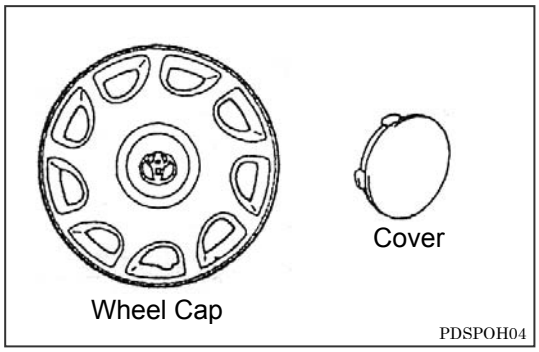

2. Install the factory-loaded parts.
   - Wheel caps or covers
   - Other parts

DI

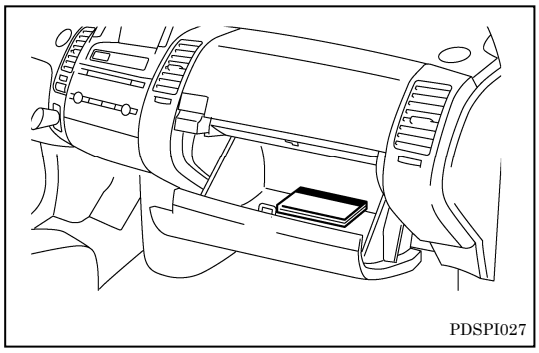

05. CHECK ON-VEHICLE ITEMS

Check the on-vehicle items for any missing, wrong and damaged item.

- Toyota warranty booklet
- Owner's manual
- Jack and tools
- Spare tire
- Luggage cover/mat
- Other on-vehicle materials

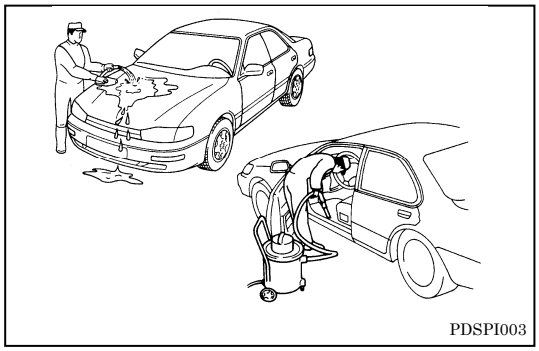

06. WASH AND CLEAN VEHICLE

Wash and clean the exterior and interior of the vehicle. Use plenty of water and a soft sponge or cloth when washing the vehicle.
Clean the carpet and seats using a vaccum cleaner.

NOTICE:

- When using a vacuum cleaner, handle it carefully in order to avoid damaging the vehicle.
- If mechanical brushes are used in an "automatic car wash", the brushes may scratch the paint surface.

HINT:
It is recommended that you wash the vehicle by hand.

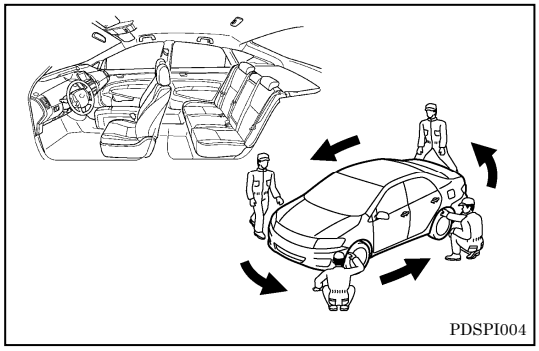

07. CHECK EXTERIOR AND INTERIOR PARTS

1. Check interior parts for dirt, damage, proper fit and alignment.
2. Visually and by hand inspect all exterior panels for surface damage caused in shipment or any abnormalities.

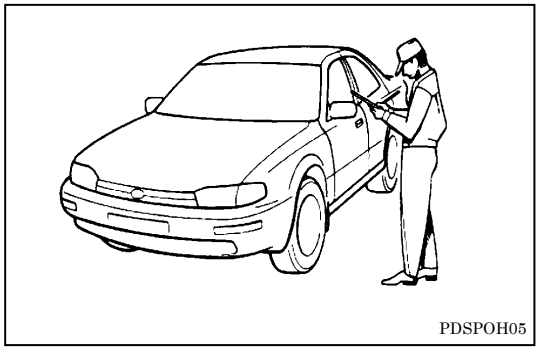

08. FINAL CONFIRMATION

Check the appropriate boxes when noting any product/quality issues and sign the PDS check sheet.
Check for any omission of a check.