TOYOTA

Vehicle Delivery Quality Improvement

MAINTENANCE PROCEDURES FOR STORED VEHICLES

TOYOTA MOTOR CORPORATION

FOREWORD

The new vehicles shall be delivered to customers with their best quality. Since the vehicle quality would be deteriorated gradually during storage, for example flat battery, paint damage, etc., the new vehicle maintenance shall be performed periodically.

These maintenance procedures have been prepared as a guideline for the new vehicle maintenance to prevent the deterioration during storage.

Please perform the best maintenance for new vehicles in accordance with this manual.

TOYOTA MOTOR CORPORATION

CONTENTS

Page

1. MAINTENANCE ITEMS AND INTERVALS……1

2. MAINTENANCE PROCEDURES

FALLOUT ON PAINT SURFACE……...……2

BATTERY……...…3

TIRE INFLATION PRESSURE……5

PARTS RUST……5

ENGINE STARTING AND VEHICLE MOVEMENT….6

A/C COMPRESSOR LUBRICATION……7

DISK BRAKE ROTOR REFRESHMENT……..…8

BODY PROTECTIVE FILM REMOVAL……..……10

1. MAINTENANCE ITEMS AND INTERVALS

Vehicles are produced in accordance with the engineering standard and the performance of some items are not guaranteed technically, such as battery for discharge and brake rotors for rust, if the vehicles are stored for longer than a certain period. Therefore, the new vehicle maintenance shall be performed periodically during storage at distributors and dealers.

MAINTENANCE ITEMS	STORAGE PERIOD (Month) 0	1	2	3	4	5	6
Fallout on Paint Surface	← Wash the vehicles immediately when fallout is found.						
Battery	★ *1	★	★	★	★	★	★
Tire Inflation Pressure		★	★	★	★	★	★
Part Rust		★	★	★	★	★	★
Engine Start and Vehicle Movement		★	★	★	★	★	★
A/C Compressor Lubrication		★	★	★	★	★	★
Disk Brake Rotor Refreshment			★		★		★
Body Protective Film Removal						★	

*1: Disconnect the negative battery terminal only.

Since the Toyota vehicles are assembled at the Toyota plants in various countries and exported to other countries, the transportation period from plant to distributor or dealers varies depending on countries. This graph shows the maintenance items and intervals, and this storage period is assumed to include one month for transportation.

2. MAINTENANCE PROCEDURES

FALLOUT ON PAINT SURFACE

In case that the vehicles are stored outdoors, fallout may be found on the paint surface depending on the environment, such as bird/insect droppings, rail dust, industrial fallout, acid rain. If such fallout remains on the paint surface for some days, the paint surface may be damaged. Therefore, the paint surface should be checked everyday and wash off such fallout immediately.

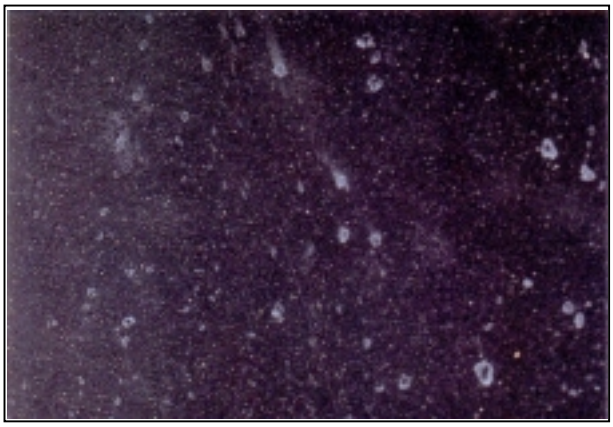

Acid rain damage
When the acid attacks paint, it can etch a very slight depression in the paint surface. Acid rain damage looks like hard water spotting. However, craters form where the acid has eaten into the paint. Therefore, wash the vehicles immediately after acid rain.

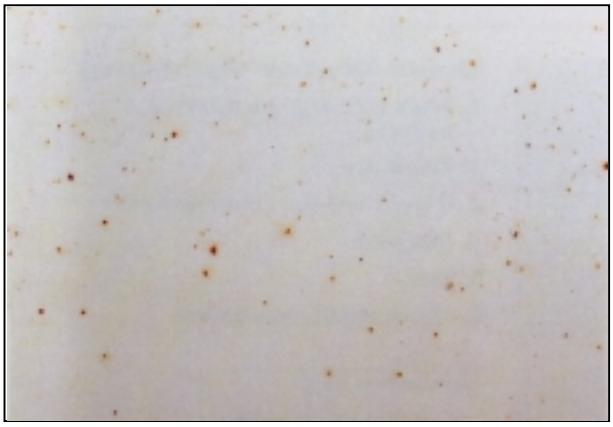

Rail dust damage
Rail dust is iron particles caused by contact between railroad tracks, wheels and rail cars themselves. When transporting the vehicle by train, this hot metallic dust may settle on the paint and become embedded in it. The iron dust soon begins to rust.
Therefore, wash the vehicles immediately, if the rail dust is found on the paint surface.

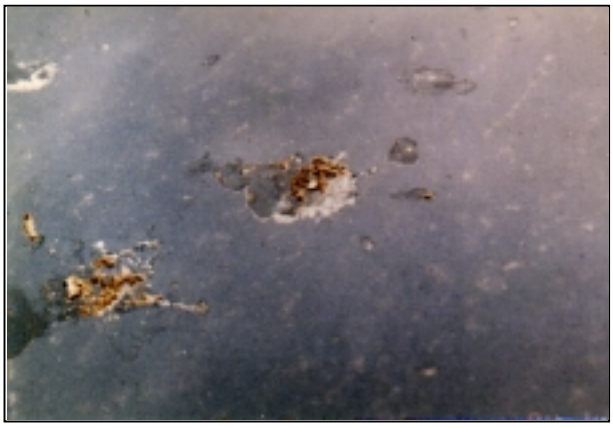

Bird and insect droppings
When bird and insect droppings settle on the paint, they can etch a very slight depression in the paint surface. Therefore, wash vehicles immediately, if the bird and insect droppings are found on the paint surface.
For dried bird and insect dropping, thoroughly moisten them with plenty of water before washing.

BATTERY

The battery remaining capacity drops by the parasitic current drawing, resulting in the flat battery while the vehicles is not used in storage. Even if the battery negative terminal is disconnected to prevent the parasitic current from drawing, the battery remaining capacity drops gradually due to battery self-discharging. If the battery remaining capacity drops below 30 %, the battery is affected for its life, i.e. the battery life will be shortened. Therefore, disconnection of the battery negative terminal is required during storage. Checking of battery remaining capacity and recharging of the battery is required every month.

Reference:
The battery with the negative terminal disconnected discharges more slowly than the battery with the negative terminal connected. It is useful to disconnect the negative terminal during storage in order to keep the battery remaining capacity longer.

Features of Battery Performance

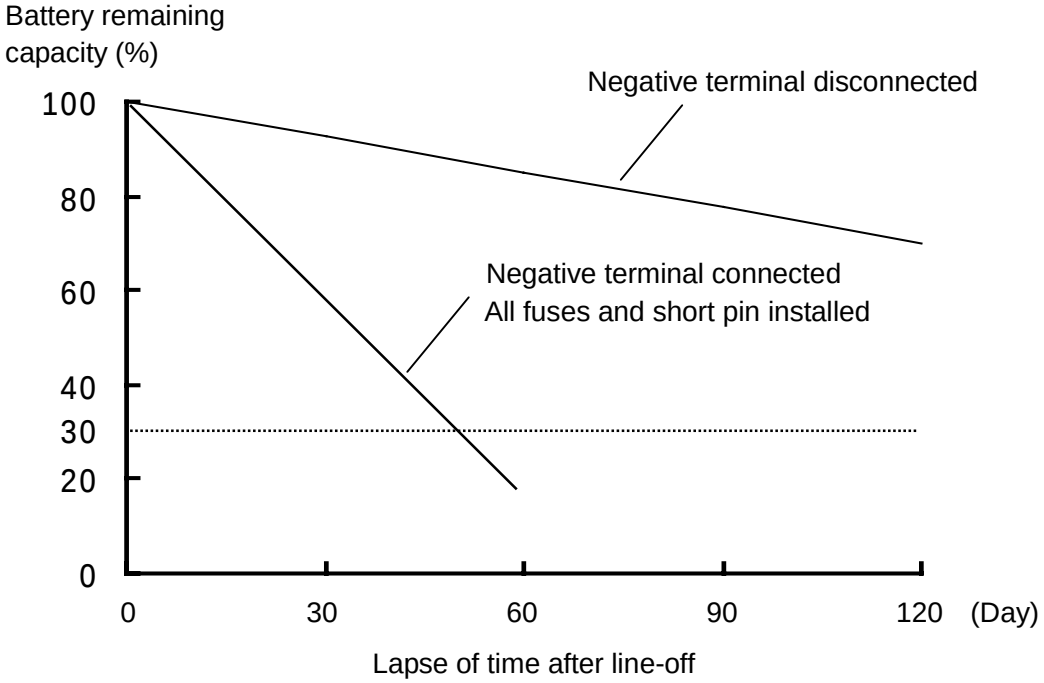

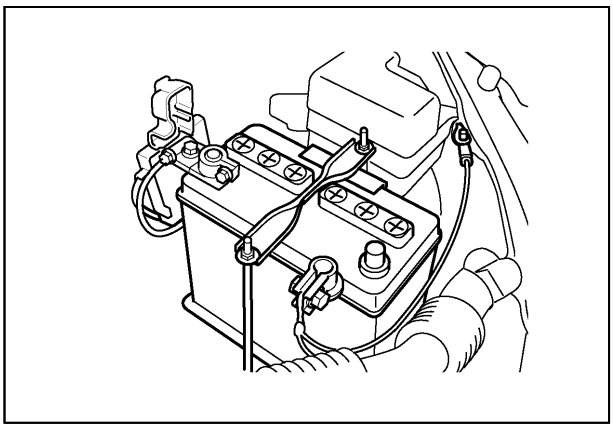

Disconnect negative battery terminal

1. Turn off all lights and accessories.
2. Remove the ignition key.
3. Disconnect the negative terminal.

Note:
When delivering the vehicle, reconnect the negative terminal.

Tightening torque: 5.9 N·m (60 kgf-cm, 4.3 ft-lbf)

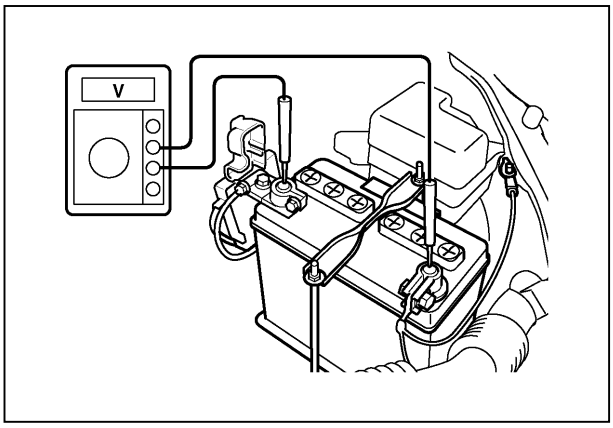

Check battery remaining capacity

1. Using a digital voltmeter, measure the battery voltage between the terminals to check the battery remaining capacity.

Notes:

- If measuring the voltage with the negative terminal connected, remove the ignition key from the key cylinder, turn off all electrical systems and wait 60 seconds or more to remove the surface charge.
- If the engine has been running before measuring the voltage, wait 20 minutes or more after the engine stops to remove the surface charge.

Battery voltage (V)	12.8	12.6	12.4	12.2	12.0
Battery remaining capacity (%)	100	80	60	40	20

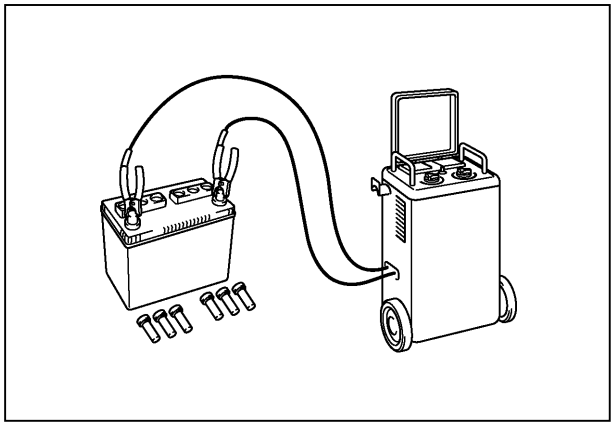

2. If the voltage is less than 12.4 V, recharge the battery at 10 A or less until the battery state of charge reaches 80 % or more.

   If the electrolyte level is low after recharge the battery, add distilled water.

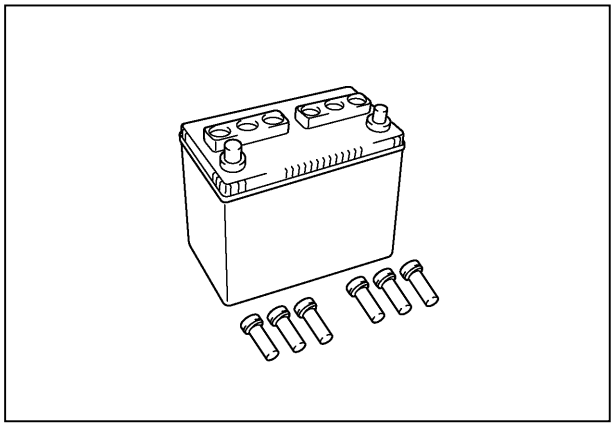

Notes:

- Be sure to remove the battery and all the vent plugs before charging.
- Always charge the battery in an unconfined area.
- Be sure not to allow fire or sparks near the battery.

TIRE INFLATION PRESSURE

If the vehicle is parked for long-term period without being moved, a flat spot may be created on each tire surface contacting with the ground even if the tires are inflated to the specification. The tire flat spot causes the problem of the vehicle vibration while the vehicle is driven. Therefore, the tire inflation pressure should be checked once a month.

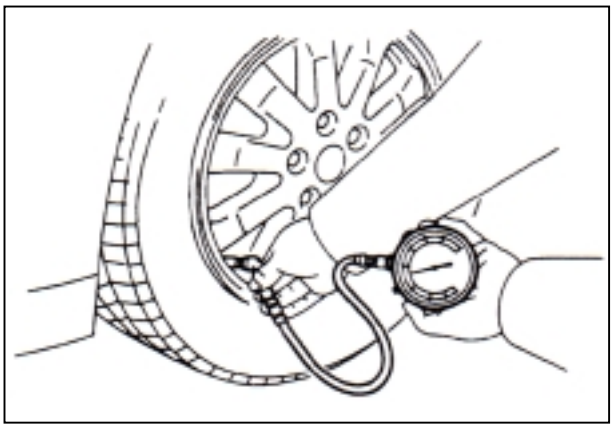

Using a tire pressure gauge, check the tire inflation pressure in cold condition.

Tire inflation pressure <u>for storage only:</u>
3.0 kg/cm^2 (43 psi)

If low, inflate the tire to 3.0 kg/cm^2 (43 psi).

Notes:
- The specified tire inflation pressure for driving is higher than 3.0 kg/cm^2 (43 psi) for some commercial vehicles such as Land Cruiser. In this case, please inflate the tire to the specified pressure for driving.
- When delivering the vehicle to customer, adjust the tire inflation pressure to the specified pressure.

PARTS RUST

When the vehicle is stored, it is influenced a great deal by the environment of your storage area. If the stored vehicles in your storage area are exposed to sea breeze or many rain, there is a possibility that corrosion with rust in some parts may occur. Therefore the rust should be checked monthly.

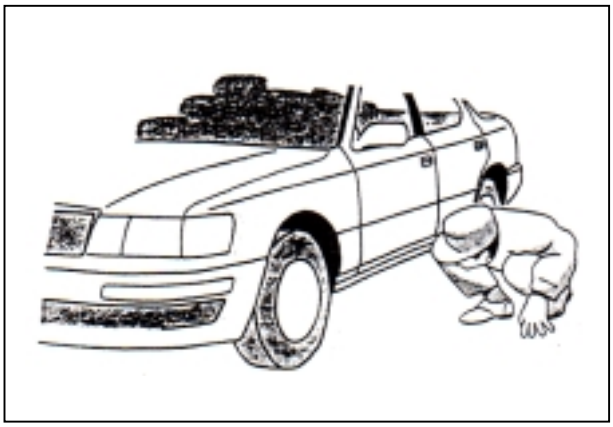

Check that there is no rust on parts that will attract the customer's attention, such as body panels.
If rust is left alone, it will gradually progress. Therefore, remove the rust and do treatment such as applying rust inhibitor to prevent recurrence of rust.

ENGINE STARTING AND VEHICLE MOVEMENT

The engine, transmission and differential are lubricated while the vehicle is driven (engine is running). If the vehicle is stored over a long period without being driven, noise may be generated and the engine may not run smoothly due to insufficient lubrication. A flat spot also may be created on each tire surface contacting with the ground.

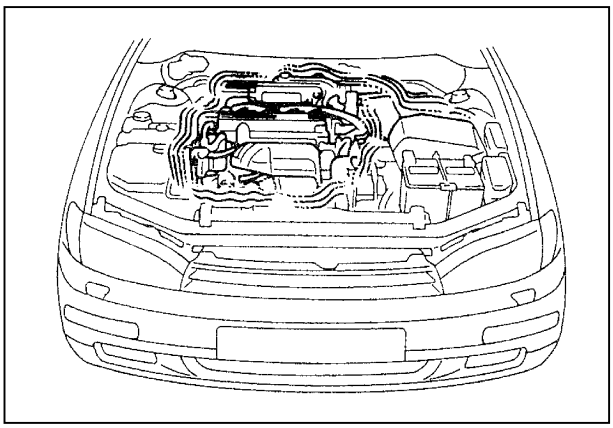

1. Start and operate the engine at engine speed less than 1500 rpm for 15 minutes or longer.

   Race the engine 10 times or more to discharge moisture from the exhaust system.

Note:
Be sure to allow sufficient clearance at the front and rear of the vehicle to prevent other vehicles stored behind from getting damaged by exhaust gas.

Recommended clearance between vehicles:
- Bumper to Bumper: More than 0.4 m
- Door to Door: More than 0.75 m

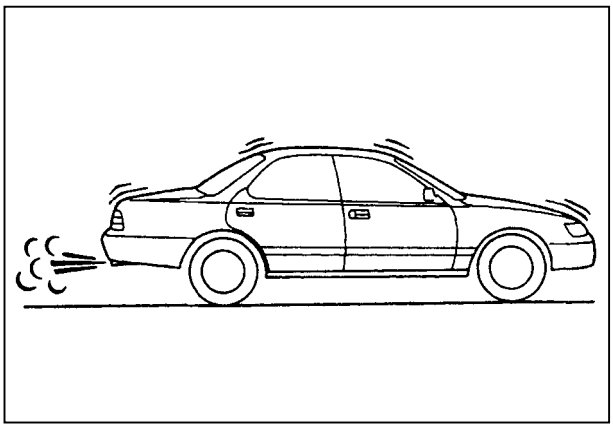

2. Move the vehicle at least 10 m to lubricate the transmission and differential, and prevent tire flat spot damage.

A/C COMPRESSOR LUBRICATION

When a vehicle is stored for a long period (more than one month), the volume of oil in the A/C compressor may decrease due to oil flow into the condenser, pipes, etc. If the A/C system is turned on at high engine RPM after a long storage period, A/C compressor may be damaged. To minimize the possibility of damage to the A/C compressor while storing a vehicle, perform the following recommended maintenance procedure at least once a month to lubricate the compressor.

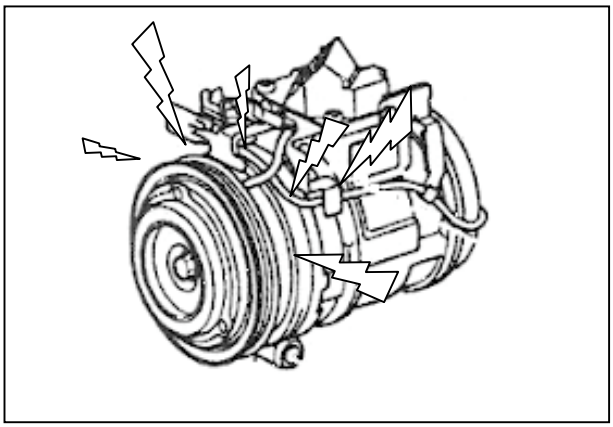

1. Turn off A/C and blower switches prior to starting engine.
2. Start and warm-up engine until engine speed drops below 1,000 RPM.
3. Turn on the A/C system (including the rear A/C) using the following settings:
   - A/C switch: On
   - Blower Speed: High
   - Engine Speed: Below 1,000 RPM
4. Keep A/C on with engine idling for one minute or more on the single A/C and for two minutes or more on the dual A/C.
5. Turn off A/C system and stop engine.

DISK BRAKE ROTOR REFRESHMENT

The brake rotors are made of cast iron, so they rust gradually while the vehicle is not driven in storage. In case that the rust on the brake rotors is not so extensive, the rust is removed by braking while the vehicle is driven. If the rust on the brake rotors is extensive, brake vibration (vibration of brake pedal, steering wheel and vehicle body, etc.) occurs when braking while the vehicle is driven. Extensive rust on brake rotors is hard to be removed by braking and even though the rust is removed, brake vibration may occur due to uneven thickness of brake rotors. Therefore, the brake rotor refreshment by braking should be performed once per two months before the rust on the brake rotors becomes extensive.

Extensive rust on rotor is hard to be removed by braking.

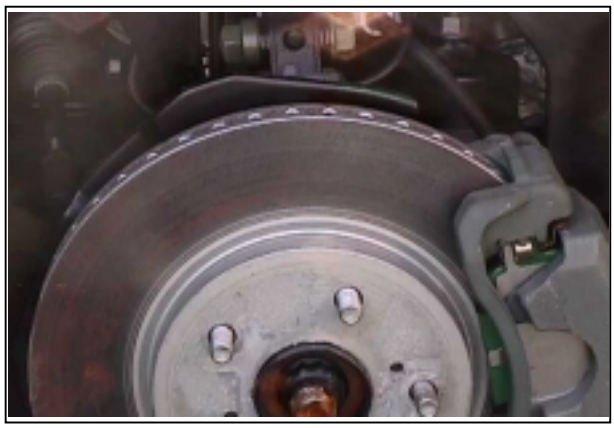

Slight rust on rotor is easy to be removed by braking.

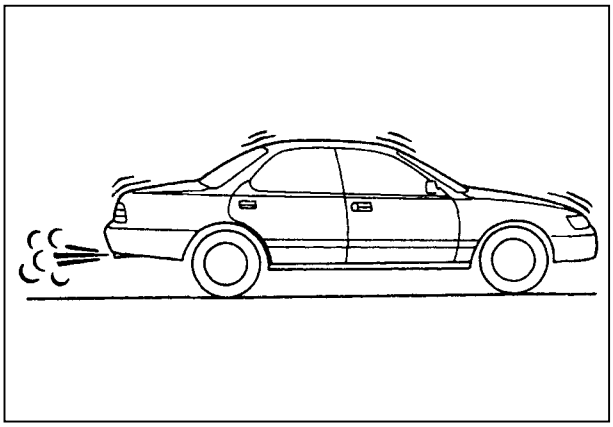

Refresh brake rotor

Drive the vehicle on a level road in safety area and apply the brakes normally. Repeat the braking several times referring to the samples of braking methods shown below.

For hybrid vehicle such as PRIUS and electrical vehicle such as RAV4 EV, perform the braking with the transmission shift lever in “N” position.

Reference:
Braking method varies for safety depending on traffic condition.

Samples of braking methods

A	Apply brake with 0.3 G from 60 mph to 0 mph (96 km/h to 0 km/h) and repeat 5 times. (During braking vehicle runs approx. 120 m in approx. 10 seconds.)
B	Apply brake with 0.3 G from 40 mph to 0 mph (64 km/h to 0 km/h) and repeat 10 times. (During braking vehicle runs approx. 55 m in approx. 6 seconds.)
C	Apply brake with 0.3 G from 30 mph to 0 mph (48 km/h to 0 km/h) and repeat 20 times. (During braking vehicle runs approx. 30 m in approx. 5 seconds.)
D	Apply brake with 0.3 G from 60 mph to 40 mph (96 km/h to 64 km/h) and repeat 10 times. (During braking vehicle runs approx. 70 m in approx. 3 seconds.)
E	Apply brake with 0.3 G from 40 mph to 20 mph (64 km/h to 32 km/h) and repeat 15 times. (During braking vehicle runs approx. 40 m in approx. 3 seconds.)

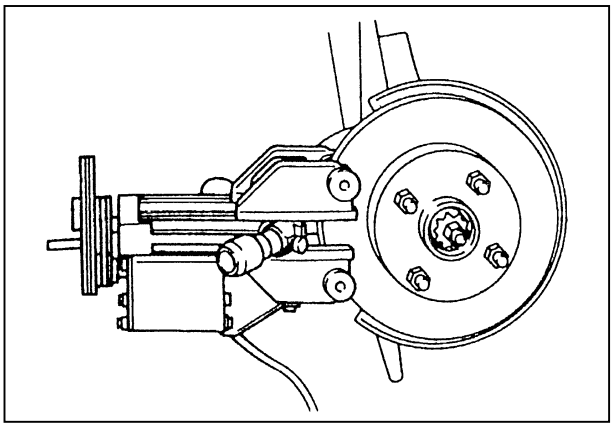

Reference:
If the brake vibration still occurs after the rotor refreshment by braking, determine the root cause of the brake vibration and repair.

If the root cause is uneven thickness of the brake rotors, resurface the brake rotors.

BODY PROTECTIVE FILM REMOVAL

Protective film is applied to protect the vehicle paint surface from fallout during transportation and storage. The effective period of the body protective film is less than 6 months after the film is applied in production. With the lapse of time after the film applied, the paint surface could be gradually affected by ambient temperature and other environmental conditions. The body protective film shall be removed within 6 months.

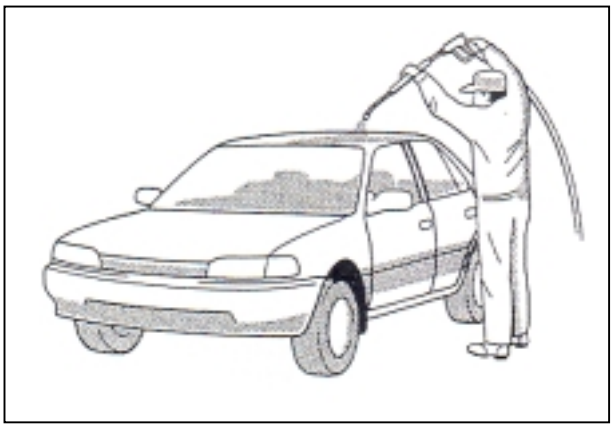

Removal procedures

1. Wash vehicle according to normal dealer procedures (brush-less car washer or hoses). This will remove any transportation dirt, grime or contamination.

Reference:

- Washing the vehicle body prevents scratches during the film removal process.
- In hot condition, cooling down the vehicle body panels below 50 °C (122 °F) by washing reduces adhesive residue on the paint surface.

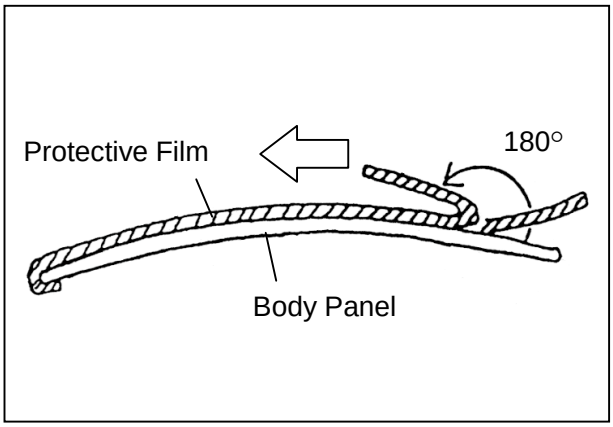

2. Begin removal of the protective film from an “uplifted” or loose corner. Pull up and back in a quick motion.

(1) Bend back the tip to 180° and quickly pull off the film.

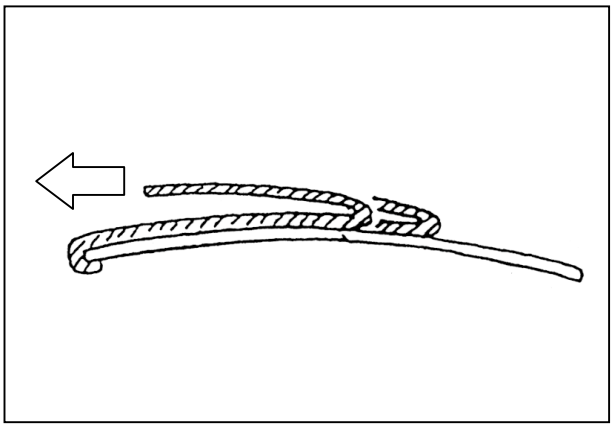

(2) Pull off the film toward the horizontal direction quickly.

Notice:
Do not place your elbow on the vehicle body.

Note:
Stand in a safe position when pulling and then pull it by force of your arms.

Protective Film Application Areas:

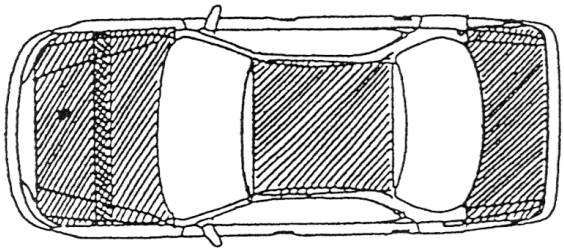

3. Repeat step 2 for all of the covered panels.
4. After the body protective film is removed, make sure to take the following precautions:

   - Using soft cloth dipped in isopropyl alcohol, clean up adhesive.
   - Do not use thinner to remove adhesive residue.
   - Expose vehicle to direct sunlight for a few days depending on ambient temperature to reduce the condition of paint stepping or swelling.
   - Do not use a polisher to remove paint stepping or swelling.
   - To speed up the reduction of paint stepping or swelling, heat sources such as infrared light, dryer, steam cleaner, etc. may be used.

Application procedure

If protective film is used for a long period over 6 months, apply new protective film again.

1. Clean up any dust, dirt and dews on the paint surface.
2. Apply new protective film from lower part of the body, overlapping the hem of protective film.
3. Apply specified protective film of 100 mm (3.94 in.) width/with holes around washer nozzles.

TOYOTA

QUALITY SERVICE

OVERSEAS CUSTOMER SERVICE TECHNICAL DIVISION

TOYOTA MOTOR CORPORATION

PRINTED IN JAPAN
First Printing: June 1994
First Revision: December 2002