Vehicle Delivery Quality Improvement

LEXUS
PRE-DELIVERY SERVICE MANUAL

TOYOTA MOTOR CORPORATION

FOREWORD

This is a revised edition of the PDS (Pre-Delivery Service) manual for Lexus vehicles.

Just as new mechanisms and features have been added to our vehicles in recent years, newer ones will be adopted at an accelerated rate in the future to make our products more comprehensive and attractive than ever.

Therefore, this revision, which is intended for worldwide application, primarily contains the mechanisms and features that are widely available.

We hope that this manual will enable as many PDS technicians as possible to recognize the necessity of PDS in improving the vehicle delivery quality, in order to provide customers with high quality vehicles and to ensure their satisfaction.

TOYOTA MOTOR CORPORATION

© 2002 TOYOTA MOTOR CORPORATION

All rights reserved. This book may not be reproduced or copied, in whole or in part, without the written permission of Toyota Motor Corporation.

PRE-DELIVERY SERVICE MANUAL

1. INTRODUCTION
2. PDS ITEMS
3. PDS OPERATION
4. VEHICLE DELIVERY INSPECTION

1. INTRODUCTION

Page

A. PURPOSE OF THIS MANUAL 2
B. DEFINITION OF PDS 2
C. MAIN POINTS OF INSPECTION 2
D. THE IMPORTANCE OF BEING THOROUGHLY FAMILIAR WITH THE OWNER'S MANUAL 3
E. THE NECESSITY OF VEHICLE DELIVERY INSPECTION 3
F. REPORTING OF PDS RESULTS 3
G. PRECAUTIONS 4

A. PURPOSE OF THIS MANUAL

This manual has been produced with the aim of performing PDS (Pre-Delivery Service) properly and immediately upon delivery of the vehicle to the Dealer.
This is a comprehensive manual which explains the proper PDS operation (including inspection items, procedures and order of operation) for technicians inspecting new vehicles.
Please read this manual thoroughly and carefully, and follow the guidelines given in order to perform PDS properly.
This manual only applies to LEXUS vehicles excluding TOYOTA vehicles.

B. DEFINITION OF PDS

PDS (Pre-Delivery Service) refers to the inspection of the finished condition of new vehicles and the operation of their functional components and mechanisms, etc., at dealerships.

C. MAIN POINTS OF INSPECTION

Inspect all areas that can be checked visually and by hand.

1. Inspection by eye and hand

   a. Paint Finish
   b. Scratches
   c. Rust
   d. Dirt
   e. Discoloration
   f. Deformation
   g. Fit

2. Functional Inspection

   a. Check for proper operation
   b. Check for smooth operation
   c. Check for noise or vibration

If any of the inspection items listed above has revealed a malfunction, appropriate actions must be taken before delivering the vehicle to the customer.

D. THE IMPORTANCE OF BEING THOROUGHLY FAMILIAR WITH THE OWNER'S MANUAL

Some features and functions of the vehicles differ from model to model. Even within the same model, features and functions could vary depending on the grade or the intended destination of the vehicle.
Because this manual is intended for worldwide distribution, the PDS operation consists primarily of inspections of widely available mechanisms and features. Therefore, to ensure the complete PDS inspection of a given model, it is necessary for the PDS technician to be thoroughly familiar with the owner's manual of that particular model and to know the proper operation of the functions and features.

E. THE NECESSITY OF VEHICLE DELIVERY INSPECTION

Following a PDS and before its delivery to the customer, the vehicle undergoes various processes such as being displayed in the showroom, placed in inventory, or having dealer option parts installed.
During the process, the vehicle could possibly sustain damage. Therefore, make sure to carry out the inspections described in Section 4 "VEHICLE DELIVERY INSPECTION."

F. REPORTING OF PDS RESULTS

To help us constantly improve new vehicle quality, it is requested that you report to TMC by Field Technical Report through your Distributor the trend problem which is occurring repeatedly and is caused by shipment quality of assembly.

G. PRECAUTIONS

When performing PDS, always follow the guidelines explained below in order to protect new vehicles from scratches and dirt.

- Always wear a clean, well-fitting uniform and keep your shoes free of dirt and mud.
- Keep your uniform free of belt buckles, buttons, watches, rings and key chains.
- Never carry tools in your pocket.
- Keep your fingernails short.

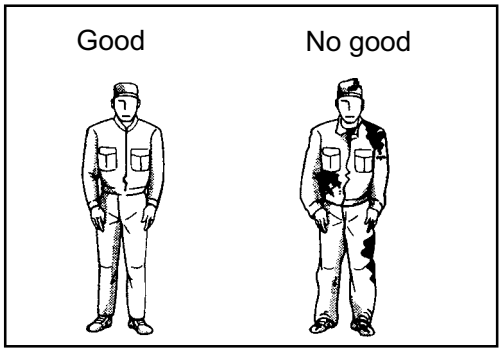

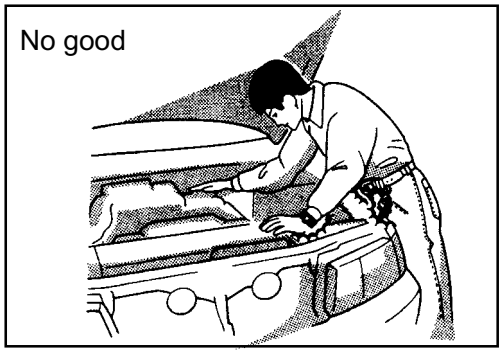

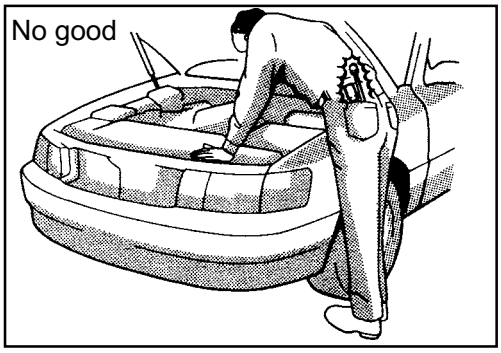

- Always keep your hands clean. If your hands become dirty, wipe them immediately.
- Do not enter the cabin compartment with dirty shoes.

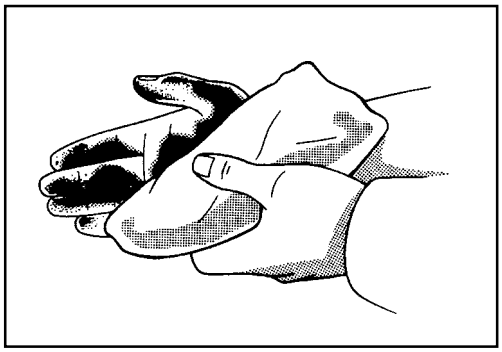

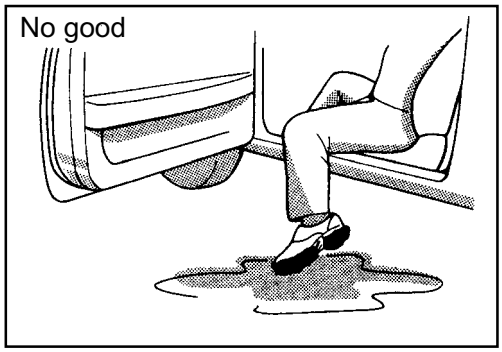

G. PRECAUTIONS (cont'd)

- The inspection area should be clean and well lit.
- The inspection area should have enough space to prevent damage to the vehicle when the doors are opened.
- Before performing engine compartment inspection, be sure to place fender and grille covers on the vehicle.

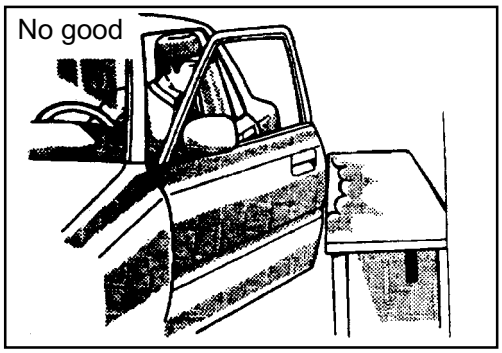

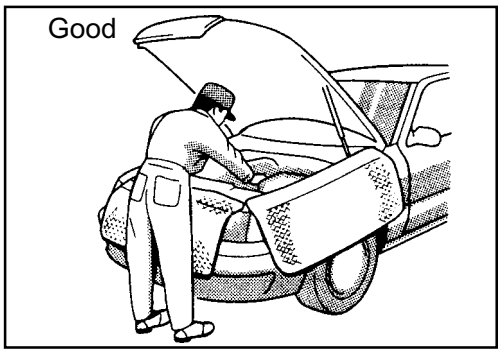

- Take care to protect body and trim parts that must be installed during PDS.
- To protect the paint surface from scratches, do not put parts on the hood, truck lid or roof.

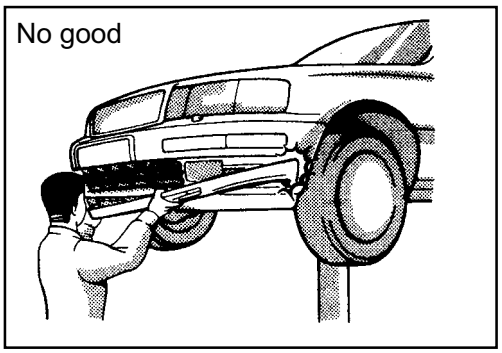

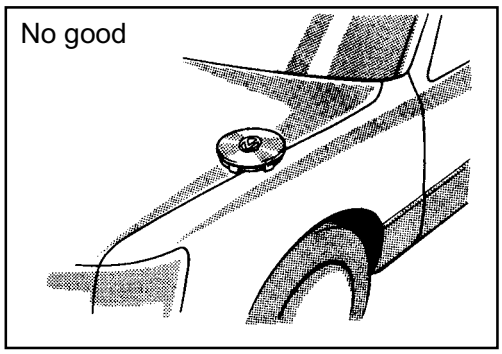

– MEMO –

2. PDS ITEMS

Page

A. BEFORE INSPECTION 8
B. WALK-AROUND INSPECTION 8
C. ENGINE COMPARTMENT 10
D. UNDER VEHICLE 10
E. ROAD TEST 11
F. FINAL INSPECTION 11

Pages 8 through 12 present the inspection items of the Pre-Delivery Service.
To details of each inspection procedure, please refer to PDS OPERATION starting on page 13.

A. BEFORE INSPECTION

See page 14

A01. Prepare required gauges and protective covers

A02. Install required fuse(s) or short pin*

A03. Install factory-loaded parts* (radio antenna, etc.)

B. WALK-AROUND INSPECTION

See pages 15 to 33

Starting at the driver's door, check the following items while walking around the vehicle in a counter-clockwise direction (if it is R.H.D., walk around the vehicle in a clockwise direction).

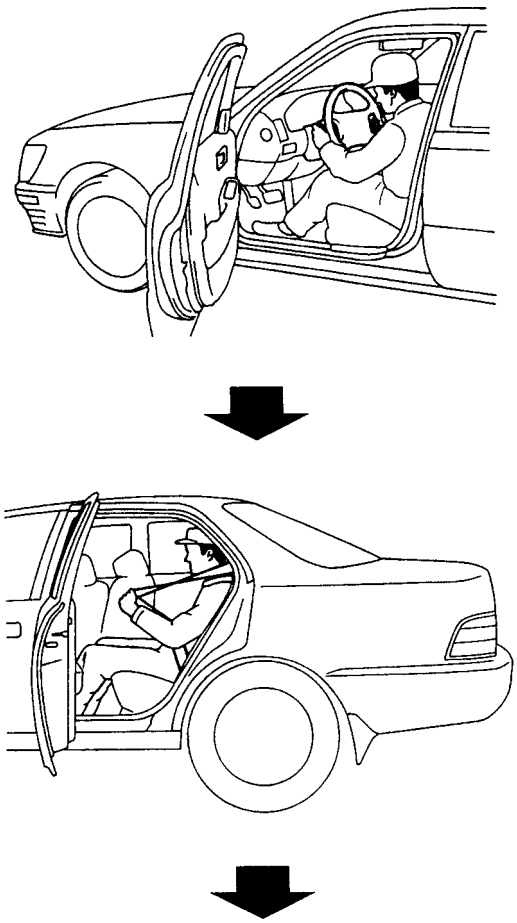

B01. Check warning lights and buzzers

B02. Check engine operation (at cold and during warm up)

B03. Check engine immobiliser system*

B04. Check lights, electrical parts and components

- Headlights, fog lights, and instrument panel lights
- Tail and license plate lights
- Rear fog lights*
- Stop and back-up lights
- Turn signal, emergency flasher lights and horn
- Wipers, washers and headlight cleaner*
- Rear window defogger, cigarette lighter and power outlet
- Audio system and clock
- Seat heater operation*
- Interior lights (dome, personal, vanity mirror, etc.)
- Sunroof or moon roof operation*

* Inspect or install when equipped/required

B. WALK-AROUND INSPECTION (cont'd)

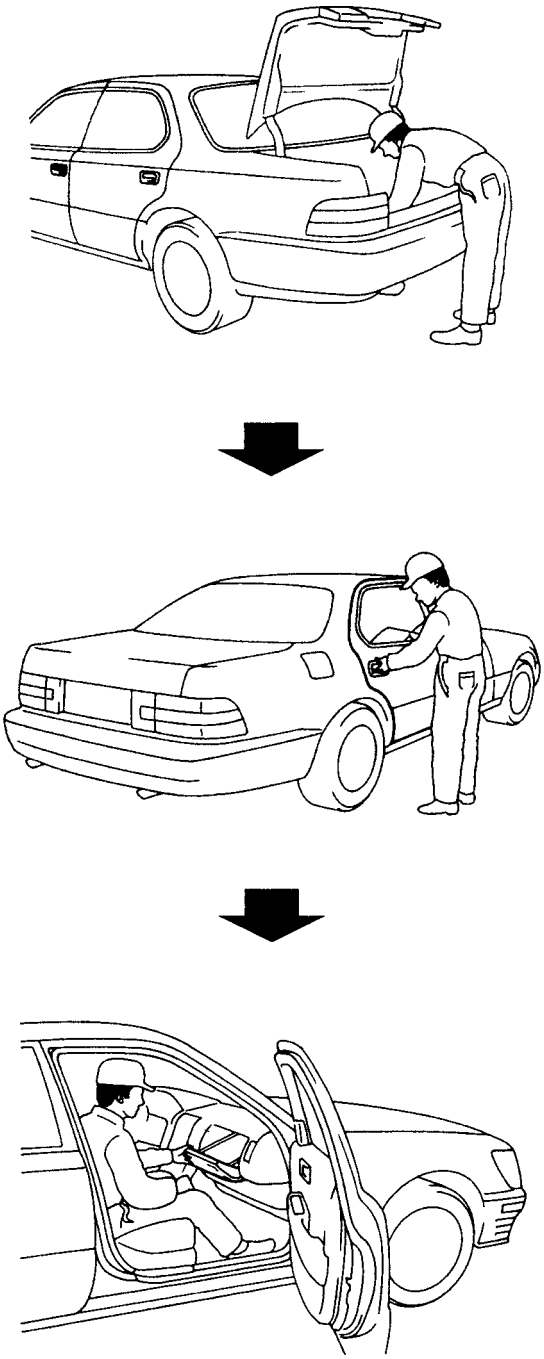

B05. Check operation of inside and outside rearview mirrors

B06. Check tilt and telescopic steering wheel operation*

B07. Check seat and seat belt operation

B08. Check glove box door, console box door and ashtray operation

B09. Check power window operation

B10. Check fuel filler door, trunk lid opener and engine hood lock release lever

B11. Check operation of doors and door locks

B12. Check child protector operation

B13. Check luggage compartment light

B14. Check luggage compartment trim and floor mat fit

B15. Check spare tire pressure and installation

B16. Check jack and tool installation

B17. Check on-board diagnosis system

B18. Remove emergency towing eyelet

* Inspect or install when equipped/required

C. ENGINE COMPARTMENT

See pages 34 to 38

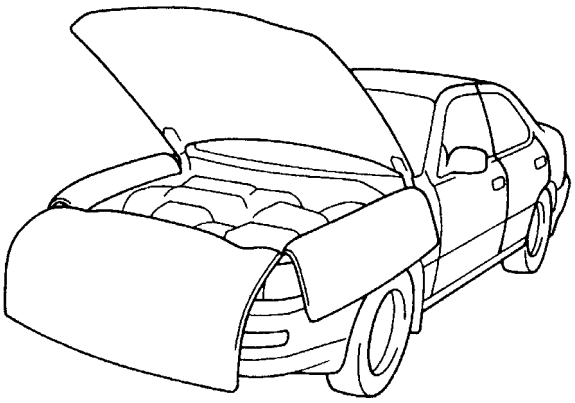

C01. Check oil and fluid level
- Engine oil
- Power steering fluid
- Automatic transmission fluid*
- Brake and clutch fluid*
- Washer fluid and coolant

C02. Inspect for fuel, oil, coolant or other fluid leaks

C03. Check battery terminal tightness

C04. Check battery electrolyte and charge level

C05. Check engine and A/C condenser cooling fans

D. UNDER VEHICLE

See page 39 to 44

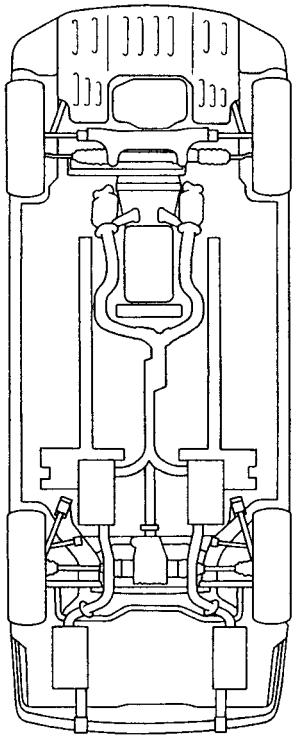

D01. Check wheel lug nut torque

D02. Adjust tire pressure

D03. Inspect tires for defects and damage

D04. Install the factory-loaded parts*

(wheel ornaments, front spoiler, mudguard, rubber body plugs, etc.)

D05. Remove disc brake anti-rust covers

D06. Remove front spring spacers*

D07. Inspect for fuel, oil, coolant or other fluid leaks

D08. Tightness of bolts and nuts on chassis and power train

D09. Inspect under vehicle condition for damage, rust, etc.

* Inspect or install when equipped/required

E. ROAD TEST

See pages 45 to 50

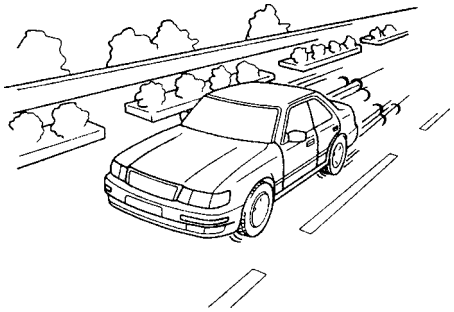

E01. Brake and clutch pedal height, freeplay and reserve distance

E02. Check engine idle speed at normal operating temperature

E03. Check driving performance and driveability

E04. Check combination meter operation
- Meters and gauges (speed meter, tachometer, water temperature, etc.)*
- Indicator lights (ECT and VSC indicators, etc.)*

E05. Check transmission operation*

E06. Check brake and parking brake operation

E07. Check steering operation (off-center, pull, etc.)

E08. Inspect for any abnormal noise and vibration

E09. Check heater and A/C operation

E10. Check cruise control operation*

F. FINAL INSPECTION

See pages 51 to 53

F01. Set the functional control system switches

F02. Remove unnecessary labels, tags, sticker, etc.

F03. Visually inspect all interior parts for installation, damage, fit, dirt, etc.

F04. Check owner information materials (Owner's Manual, etc.)

* Inspect or install when equipped/required

F. FINAL INSPECTION (cont'd)

F05. Check penlight and dry cell battery*

F06. Wash and clean vehicle

F07. Inspect paint finish for scratches, chips, damage, etc.

F08. Inspect exterior body parts for proper installation, damage, rust, etc.

F09. Full up the fuel tank

* Inspect or install when equipped/required

3. PDS OPERATION

Page

A. BEFORE INSPECTION 14
B. WALK-AROUND INSPECTION 15
C. ENGINE COMPARTMENT 34
D. UNDER VEHICLE 39
E. ROAD TEST 45
F. FINAL INSPECTION 51

A. BEFORE INSPECTION

A01. PREPARE REQUIRED GAUGES AND PROTECTIVE COVERS

Prepare the following gauges and protective covers.

(a) Hydrometer

(b) Digital voltmeter

(c) Diagnosis monitor

(d) Tire pressure gauge

(e) Seat covers

(f) Fender covers

(g) Floor covers

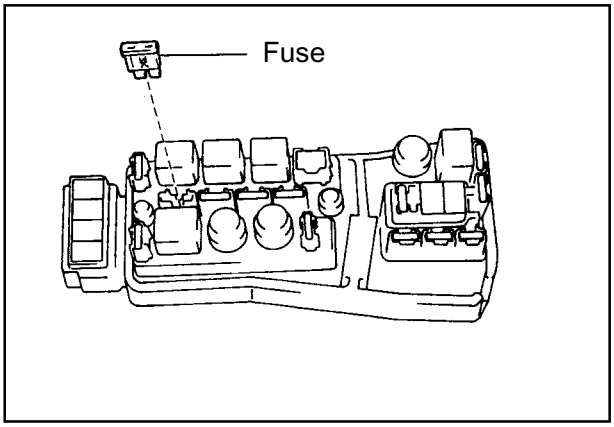

A02. INSTALL REQUIRED FUSE(S) OR SHORT PIN

Install the fuse(s) or short pin prior to beginning the inspection.

HINT: The fuse(s) or short pin are stored in a specified location for each vehicle. (Refer to the Service Bulletin.)

When installing/removing the fuse(s), make sure to keep the following precautions to prevent ignition key confinement in case the theft deterrent system operates.

- Ignition key should not be kept in the key cylinder before installing the fuse(s).
- One of the door glasses should be kept open before installing or removing the fuse(s).
- Door lock should be in the unlocked position before removing the fuse(s).

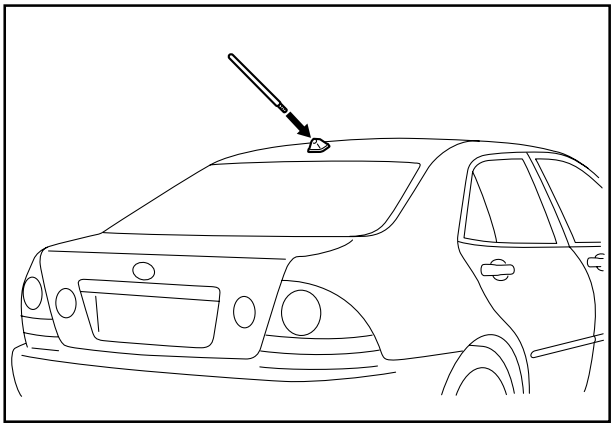

A03. INSTALL FACTORY-LOADED PARTS

Install the factory-loaded parts prior to beginning the inspection.

(a) Radio antenna

(b) Others

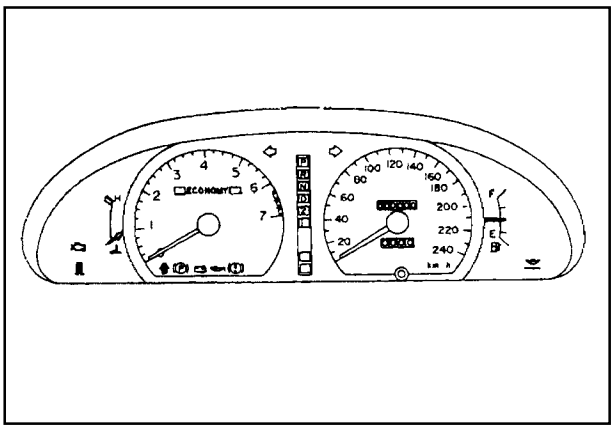

B. WALK-AROUND INSPECTION

B01. CHECK WARNING LIGHTS AND BUZZERS

1. Check that the warning lights are illuminated with the ignition switch "ON", and that the warning lights go off after the engine is started.
2. Check that the buzzers.

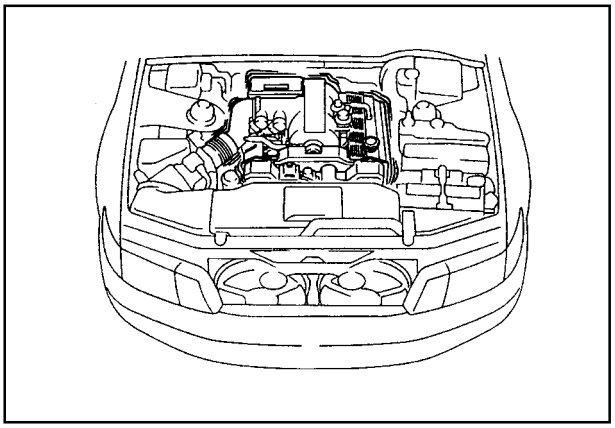

[Start the engine]

B02. CHECK ENGINE OPERATION

(at cold and during warm up)

Check that the engine operation is smooth.

Check for:
(a) Engine startability
(b) Noise and vibration
(c) Rough idle

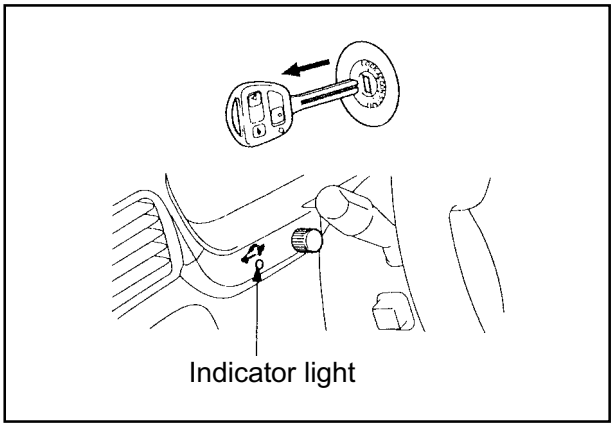

B03. CHECK ENGINE IMMOBILISER SYSTEM

1. Check that the security indicator flashes when the ignition key is removed from the ignition switch.
2. Check that the engine can be started using all the ignition keys (master and sub-keys, card key).
3. Check that the security indicator turns off when the master and sub key is inserted in the ignition switch.
4. Remove the key plate from card key case and insert into the ignition switch.
   Check that the security indicator goes out when bringing the arrow of card key case closer to the ignition switch.

B04. CHECK LIGHTS, ELECTRICAL PARTS AND COMPONENTS

NOTICE: To prevent the battery from being discharged, the engine should be running when turning on the electrical control switches.

HINT: Use a mirror or have someone help you when checking the lights.

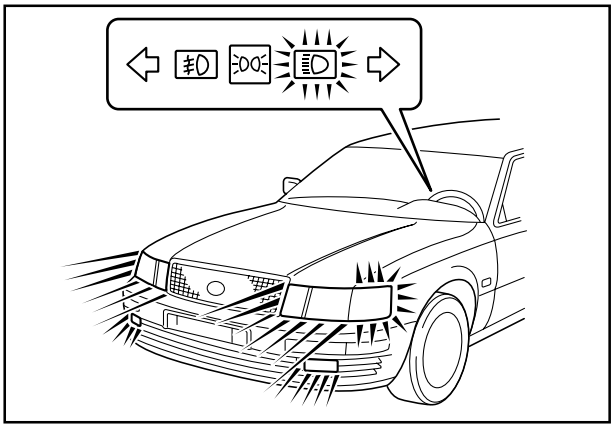

- **HEADLIGHTS, FOG LIGHTS AND INSTRUMENT PANEL LIGHTS**

1. Check that the headlights, fog lights and clearance lights actually come on when the headlight and fog light switches are turned on.
2. Check that the high beam indicator light comes on when the headlight switch is at high beam position.
3. Check the daytime running lights, in which the headlights and tail lights are come on automatically when the engine is started.

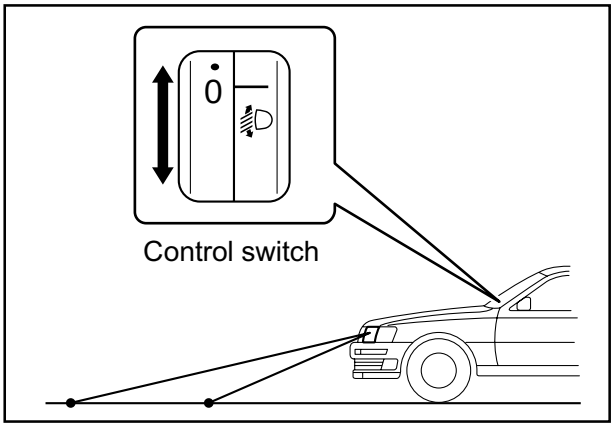

4. Check that the headlight beam level control system operates properly.

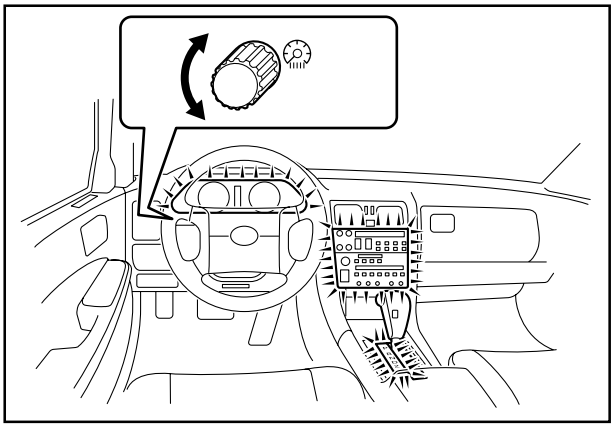

5. Check that the instrument panel lights (combination meter, heater, radio, etc.) come on when the headlights are turned on.
6. Check that the instrument panel light control knob operates properly (from bright to dark) when turned.

   HINT: Check by blocking the automatic light control sensor.

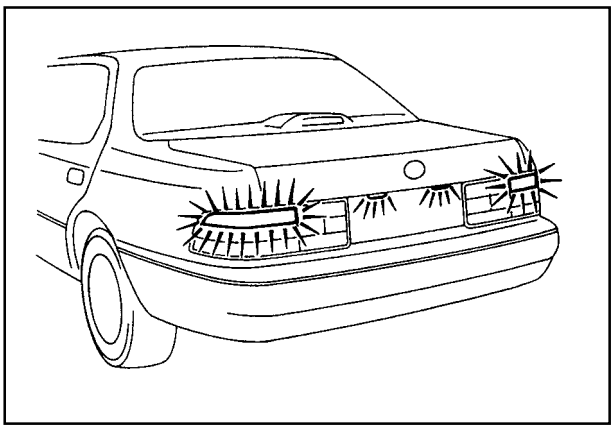

- **TAIL AND LICENSE PLATE LIGHTS**

  Check that the tail and license plate lights actually come on when the headlights are turned on.

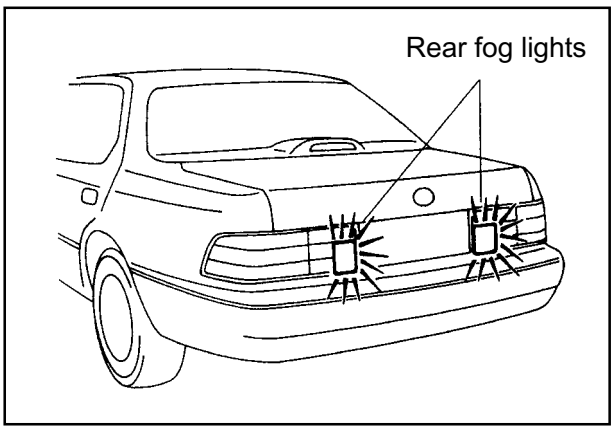

- **REAR FOG LIGHTS**

  Check that the rear fog lights and indicator light come on when the rear fog light switch is "ON".

  HINT: The rear fog lights come on when the headlights are turned on.

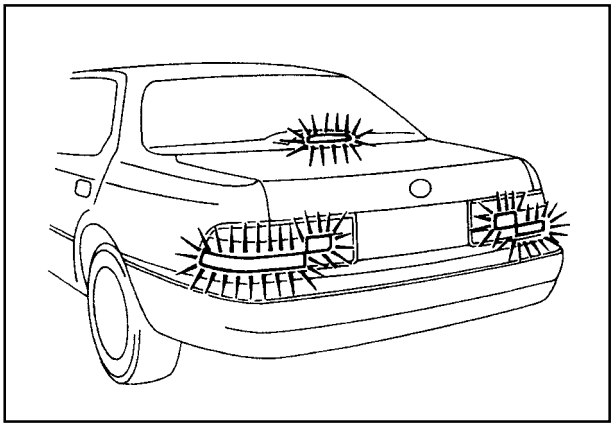

- **STOP AND BACK-UP LIGHTS**

1. Check that the stop lights come on when the brake pedal is depressed.
2. Check that the back-up lights come on when the shift lever is placed in reverse.

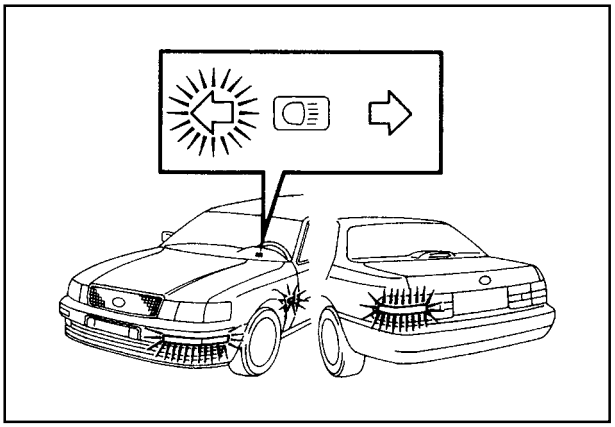

- **TURN SIGNAL, EMERGENCY FLASHER LIGHTS AND HORN**

1. Check that the turn signal switch operates properly.
2. Check that the turn signal lights and turn signal indicator lights blink.

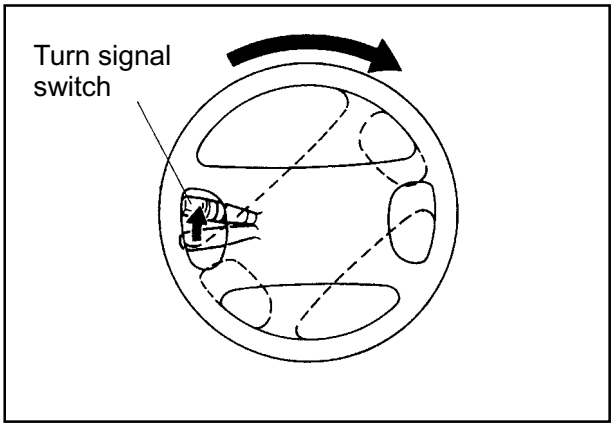

3. Check that the turn signal self-cancelling operates properly.

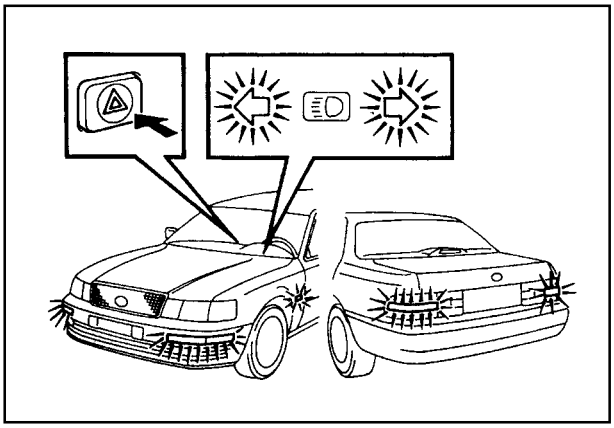

4. Check that all turn signal lights, signal indicators and red indicators blink when the emergency flasher switch is "ON".

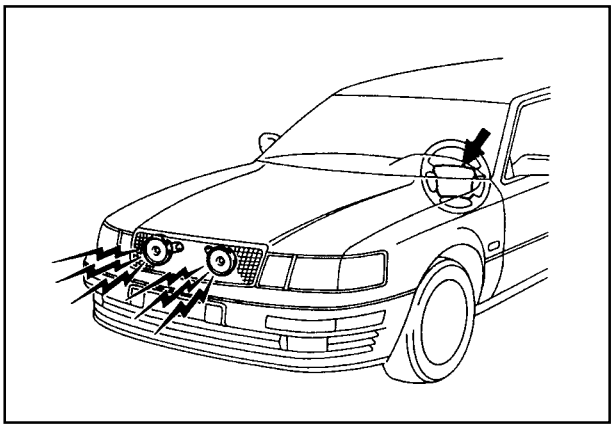

5. Check that the horn sounds.

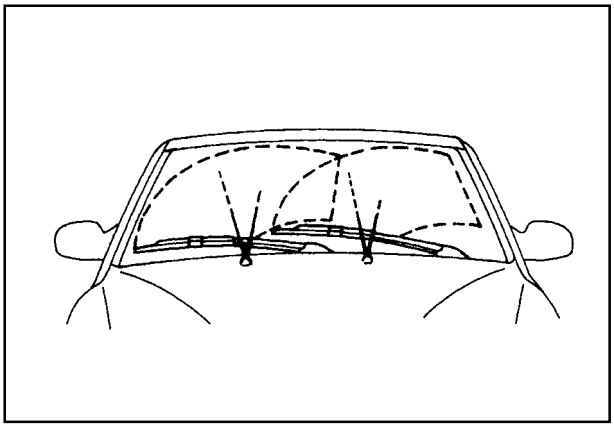

- **WIPERS, WASHERS AND HEADLIGHT CLEANER**

1. Check that the washer fluid squirts onto the proper area of the windshield.

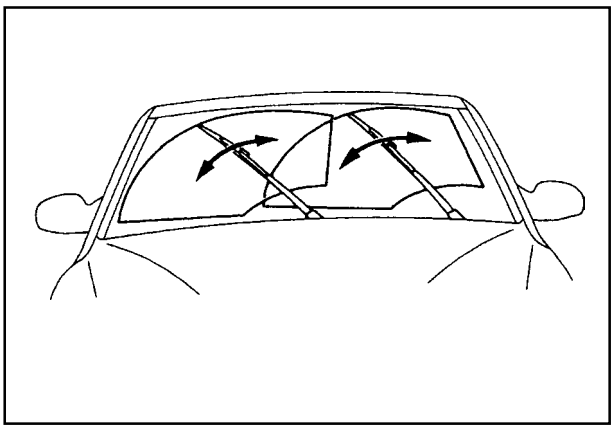

2. Check operation of the wipers (Intermittent, low speed, high speed and mist operation).
3. Check that the wiper blades wipe off cleanly.
4. The wipers should not make any abnormal noise when operating.
5. The wiper arm should not contact the windshield moulding.

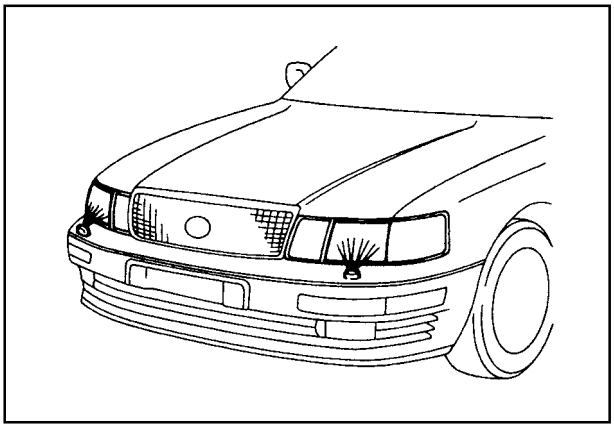

6. Check the operation of the headlight cleaner.

   HINT: The headlight cleaner can be operated when the headlights are turned on.

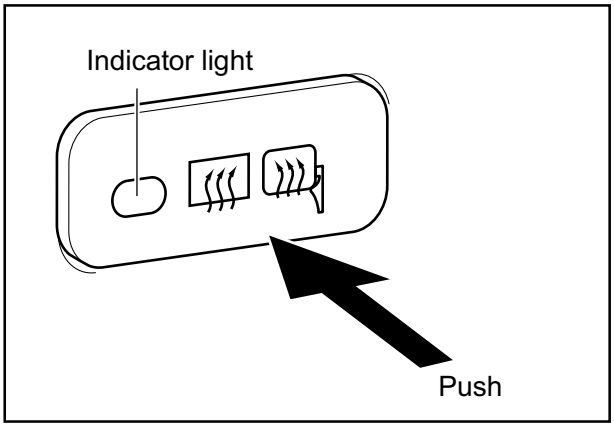

- **REAR WINDOW DEFOGGER, CIGARETTE LIGHTER AND POWER OUTLET**

1. Push the rear window defogger switch and make sure the indicator light comes on.

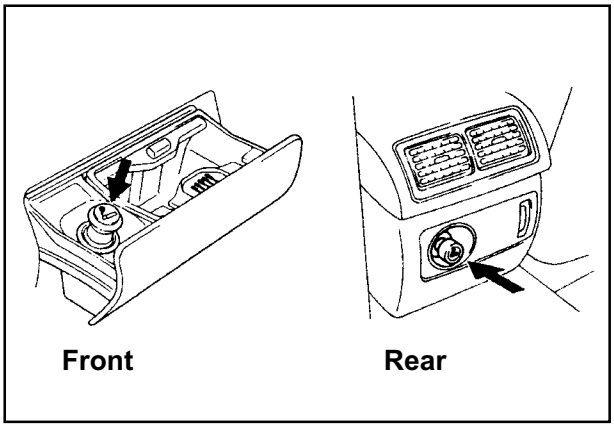

2. Push in the cigarette lighter and check that the coil is bright red when the lighter automatically pops out.

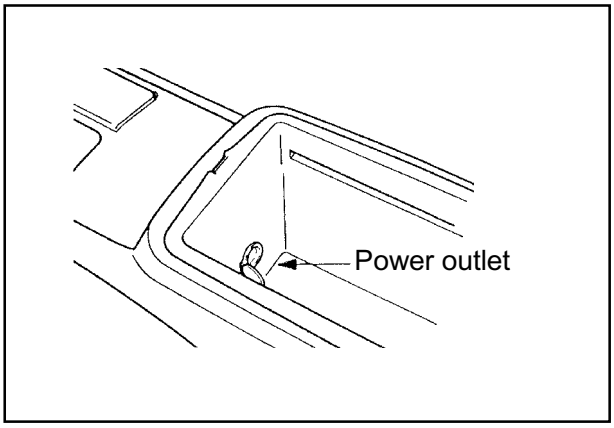

3. With the ignition switch in the "ACC" or "ON" position, check the power outlets in the console box using an electrical accessory designed for this use.

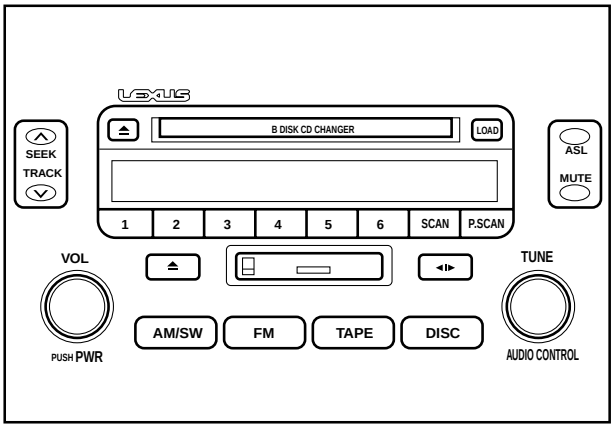

- **AUDIO SYSTEM AND CLOCK**

1. Push the power volume switch on and check that it operates smoothly.
2. Pre-set the station selector buttons to the local broadcast frequencies.
3. Check the cassette and compact disc player operation.

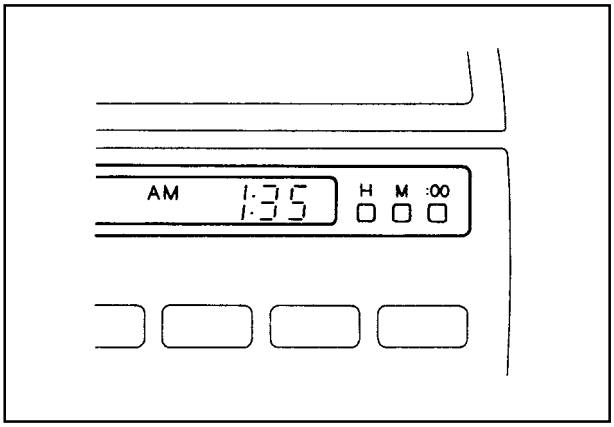

4. Check that the clock operates and set it to the correct time.

   HINT: For details, refer to the Owner's Manual.

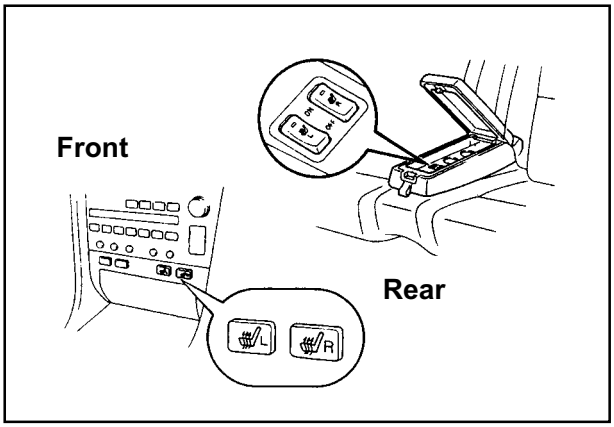

- **SEAT HEATER OPERATION**

Check the front and rear seat heater operation.

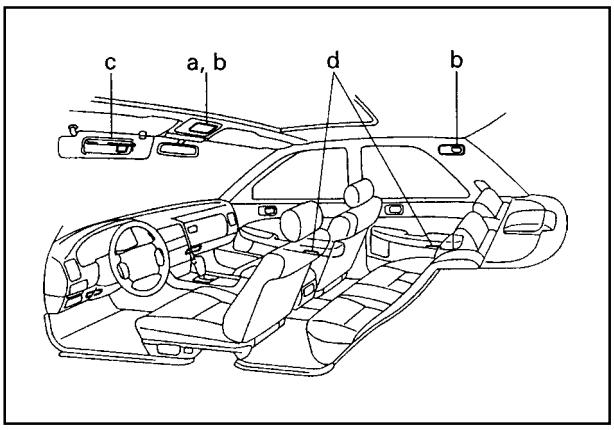

- **INTERIOR LIGHTS**

  Check the operation of the following interior lights:

  (a) Dome light
  (b) Personal lights
  (c) Vanity mirror lights
  (d) Door courtesy lights
  (e) Others

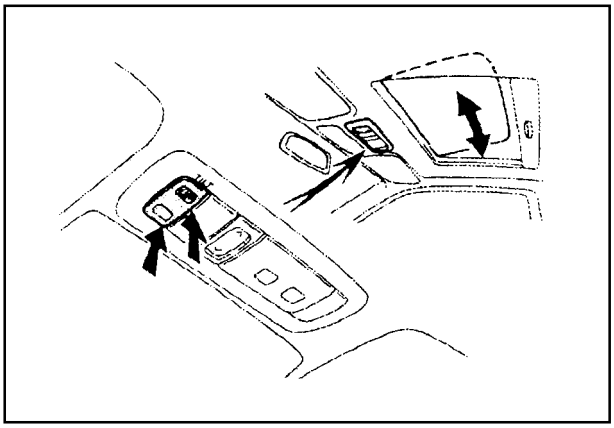

- **SUNROOF OR MOON ROOF OPERATION**

  [Power sun (moon) roof]

  Check the power sun (moon) roof for smooth operation, travel and any unusual noise.

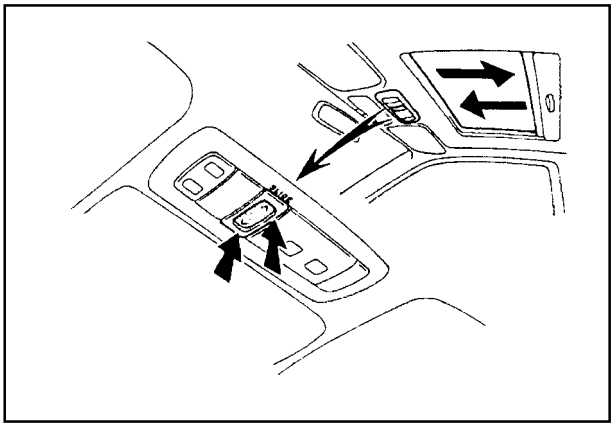

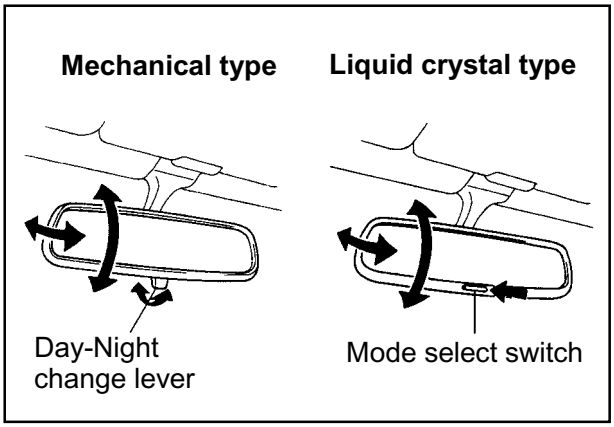

B05. CHECK OPERATION OF INSIDE AND OUTSIDE REARVIEW MIRRORS

1. Check that the inside rearview mirror can be adjusted smoothly.
2. Check the operation of the day-night change lever of the inside rearview mirror.
3. Check that the mode indicator on the inside rear view mirror turns on and off by pushing the mode select switch.

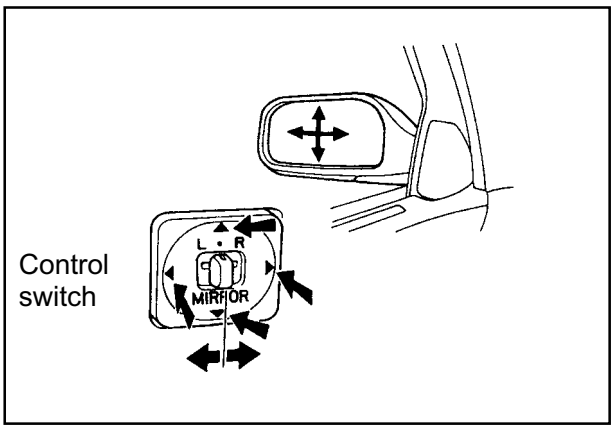

4. Check that the outside rearview mirror can be adjusted smoothly.
5. The outside rearview mirror should not make any abnormal noise when operating.

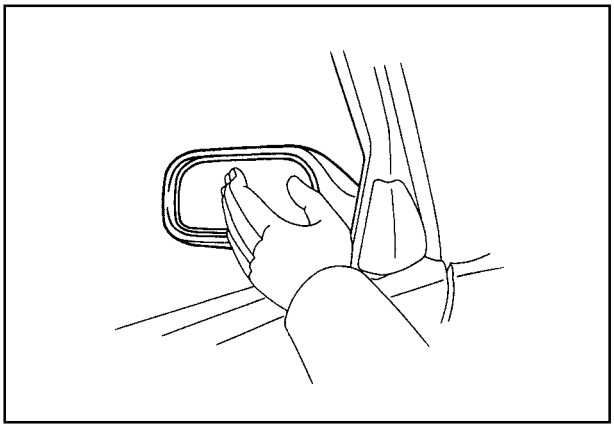

6. Check the operation of the mirror heater.

   HINT: The mirror heaters are turned on when the rear window defogger is operated.

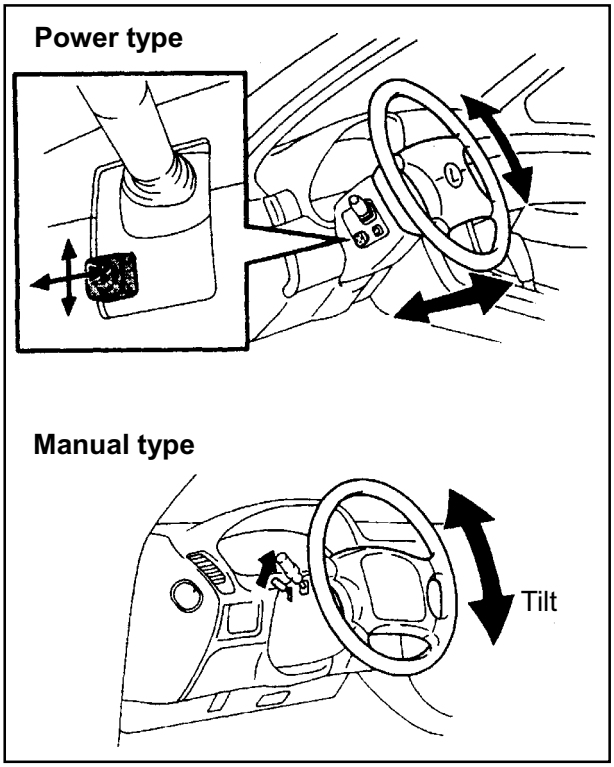

B06. CHECK TILT AND TELESCOPIC STEERING WHEEL OPERATION

1. Check that the tilt and telescopic steering wheel can be adjusted smoothly and locks securely in each position.

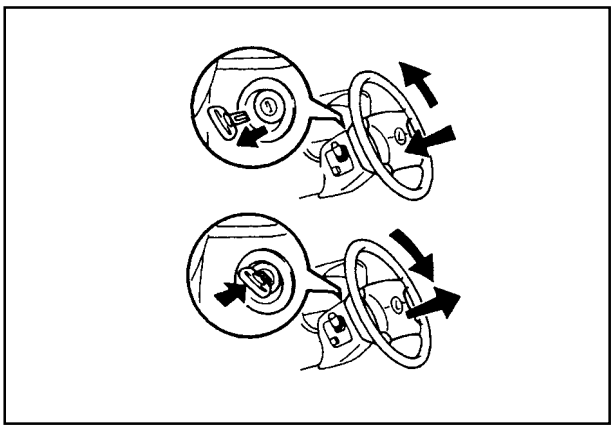

2. Check that the Auto tilt-away operation.

   HINT: For details, refer to the Owner's Manual.

B07. CHECK SEAT AND SEAT BELT OPERATION

1. Check that the seat slides smoothly, reclines properly, and locks securely in any position.

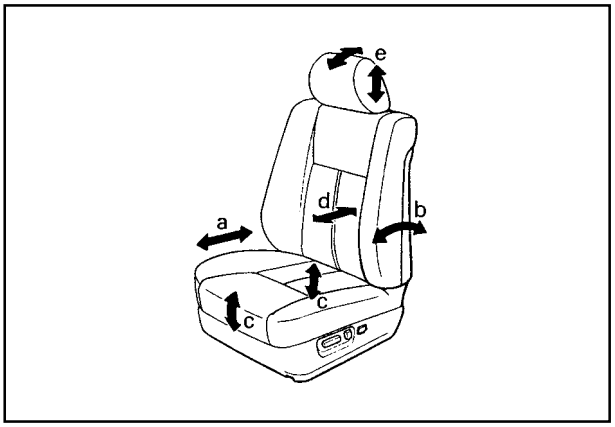

[Front seat]

(a) Seat slide adjustment
(b) Seat reclining adjustment
(c) Seat vertical adjustment
(d) Lumbar support adjustment
(e) Headrest adjustment

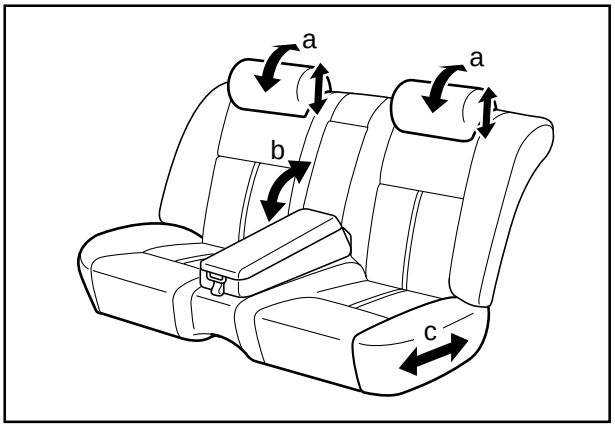

[Rear seats]

(a) Headrest adjustment
(b) Center arm rest operation
(c) Seat slide adjustment

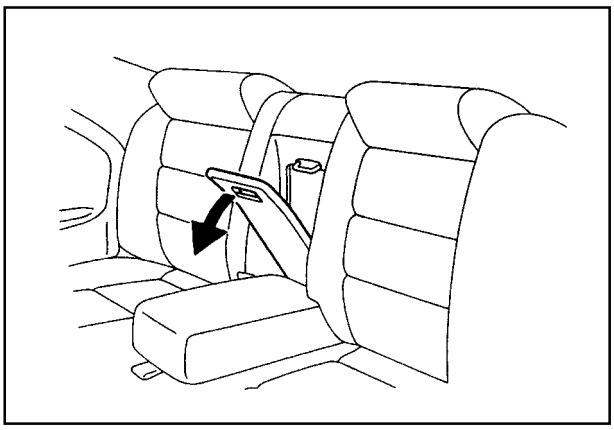

(d) Armrest door operation

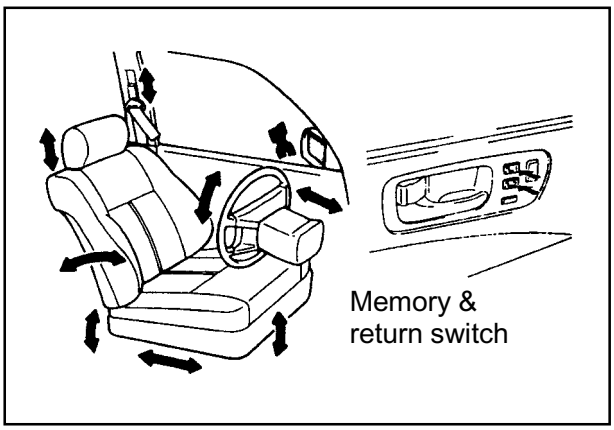

2. Check that the driving position and rear seat position memory system operation smoothly.

   HINT: Please refer to the Owner's Manual for setting.

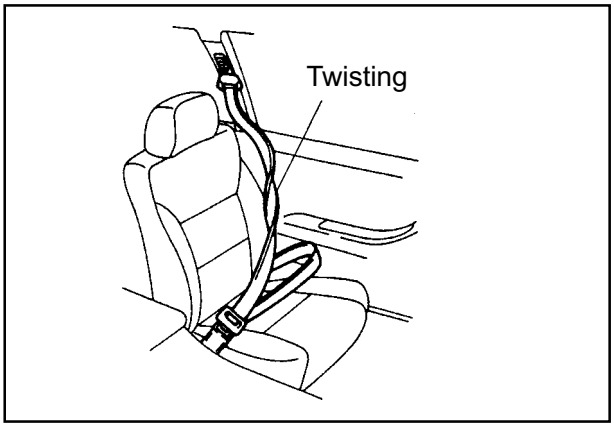

3. Visually check the seat belt appearance and check for smooth operation.

   (a) Check for twisting, dirt and damage

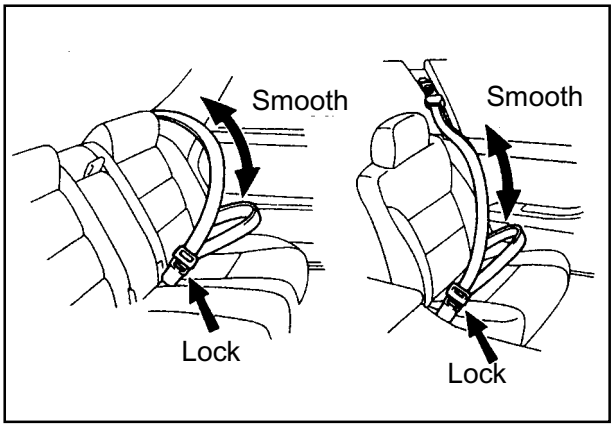

(b) Smooth extension and retraction
(c) Secure locking and smooth release

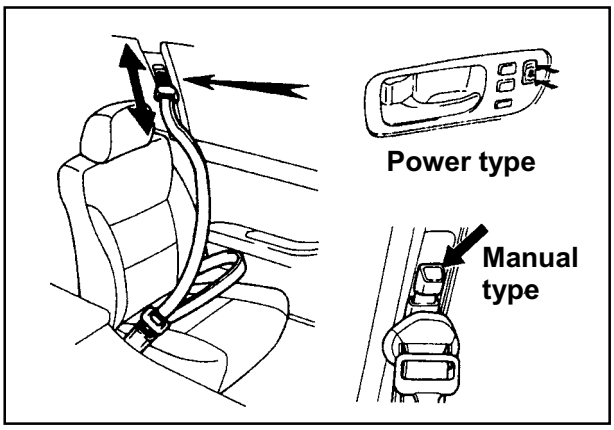

4. Check that the adjustable shoulder belt anchor moves smoothly and locks securely.

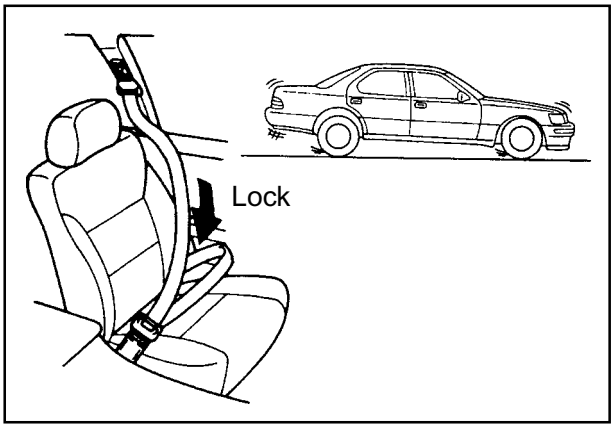

5. Check that the belt locks during sudden braking.

   HINT: Perform this check during the road test.

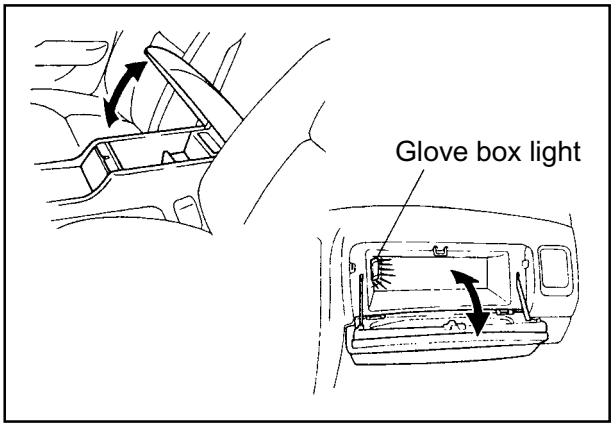

B08. CHECK GLOVE BOX DOOR, CONSOLE BOX DOOR AND ASHTRAY OPERATION

1. Check that the glove box door and console box door open and close smoothly.
2. Check that the glove box light comes on when the glove box is opened.

   HINT: The glove box light comes on when the headlights are turned on.

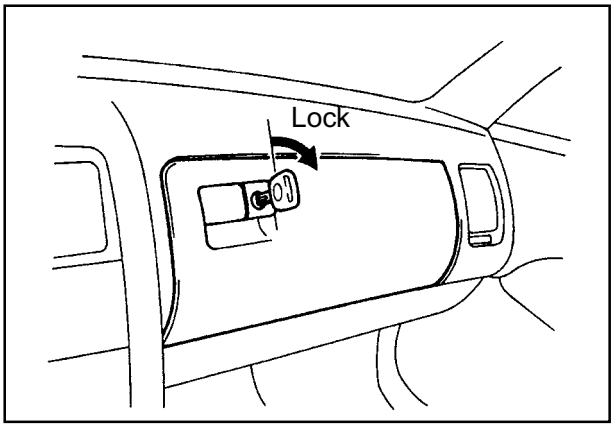

3. Check that the glove box cannot be opened when it is locked with the key.

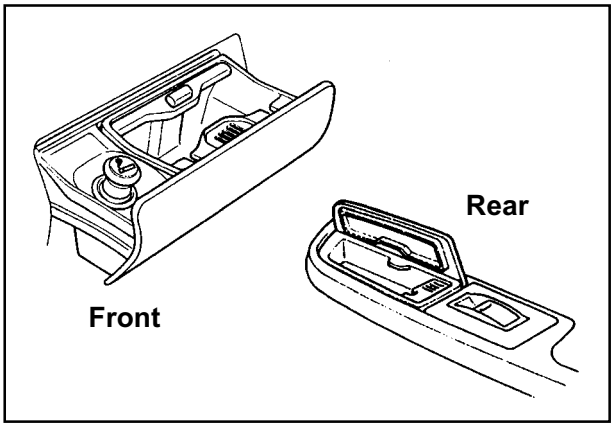

4. Check that the ashtray opens and closes smoothly.

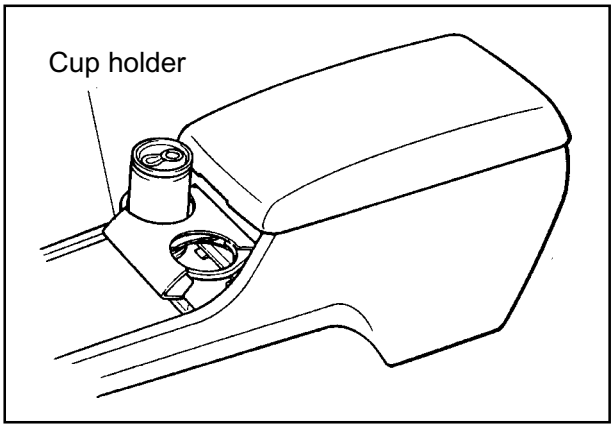

5. Check that the cup holder pushes out when the holder is pushed down.
   Repush the holder to shuts in place.

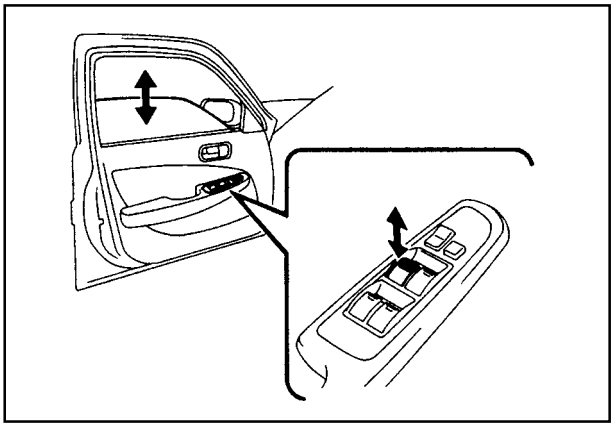

B09. CHECK POWER WINDOW OPERATION

1. Check that the door windows open and close smoothly using the power window switches on each door.

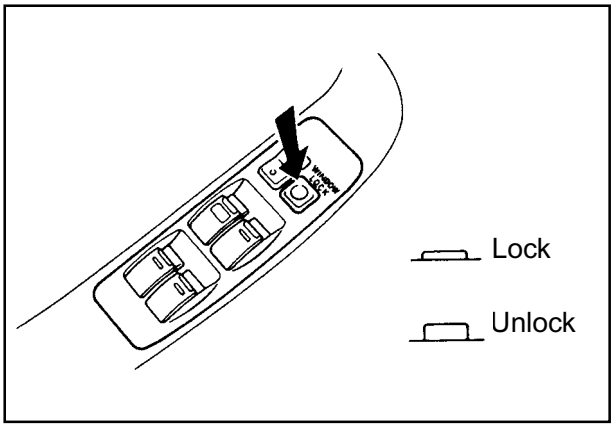

2. Check that the window lock switch operates properly.

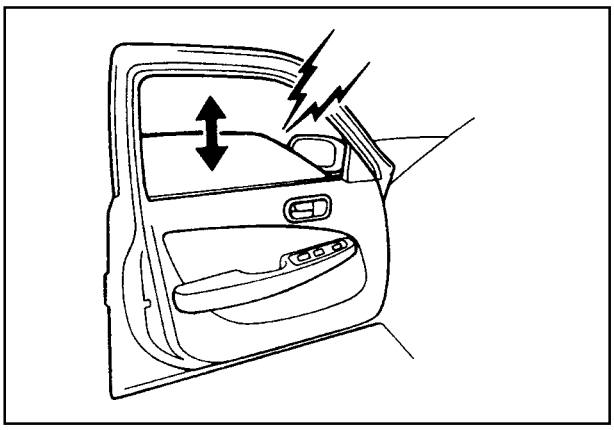

3. All windows should operate without any abnormal noise.

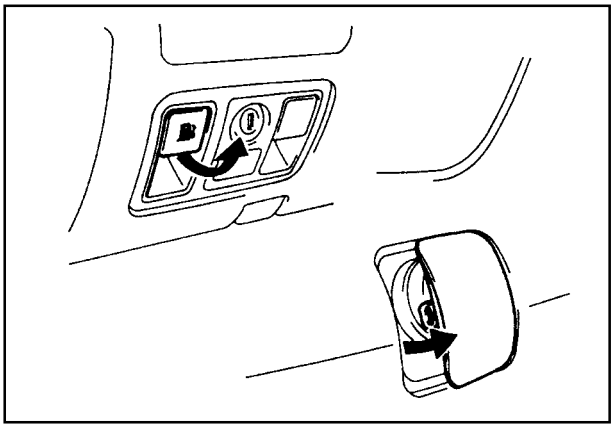

B10. CHECK FUEL FILLER DOOR, TRUNK LID OPENER AND ENGINE HOOD LOCK RELEASE LEVER

1. Check that the fuel filler door opens smoothly using the opener.

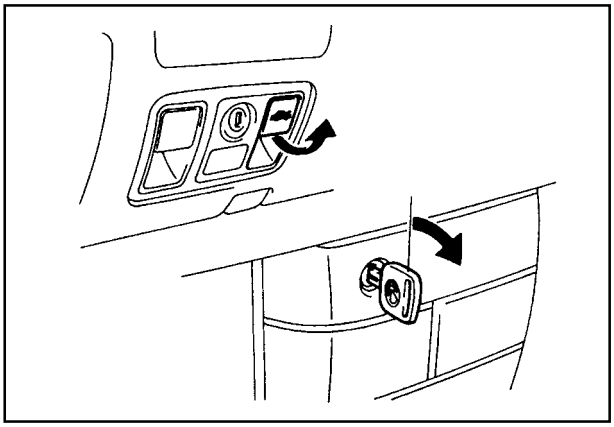

2. Check that the trunk lid opens smoothly using the opener and/or key.

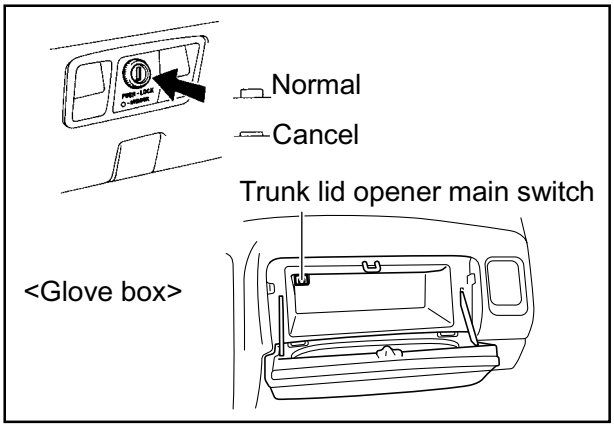

3. Check that the trunk lid opener does not operate when the "cancel system" is operated.

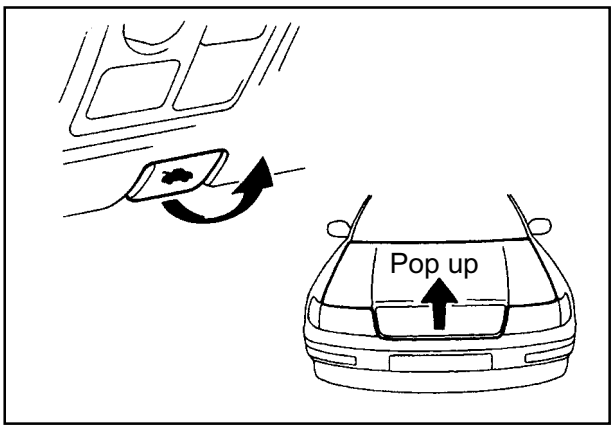

4. Check that the engine hood pops up smoothly when the release lever is pulled.
5. Check that the hood safety catch prevents the hood from being lifted.
6. Check that the hood locks securely when the edge of the hood is pushed closed by hand.

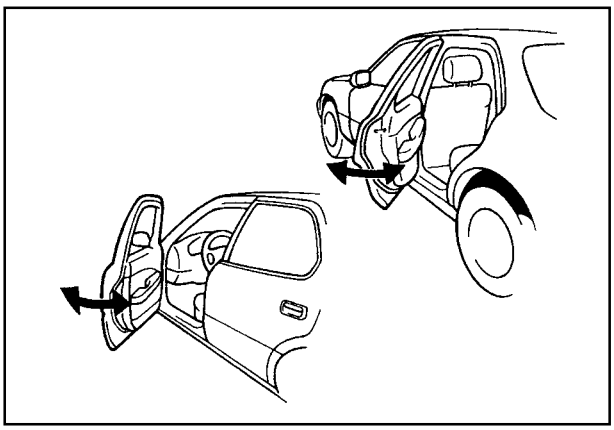

B11. CHECK OPERATION OF DOORS AND DOOR LOCKS

[Door operation]

1. Check that all doors open and close smoothly.
   (a) Front and rear doors

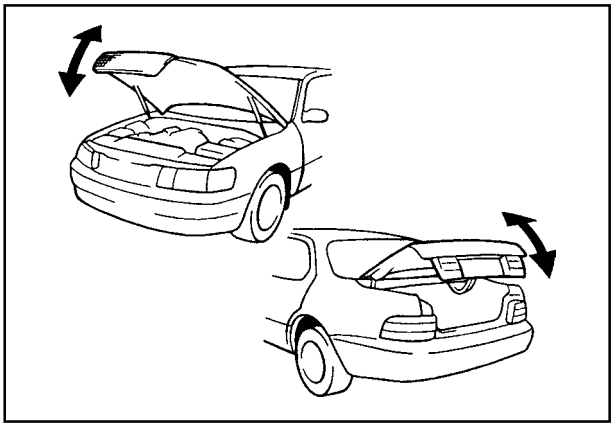

   (b) Engine hood
   (c) Trunk lid

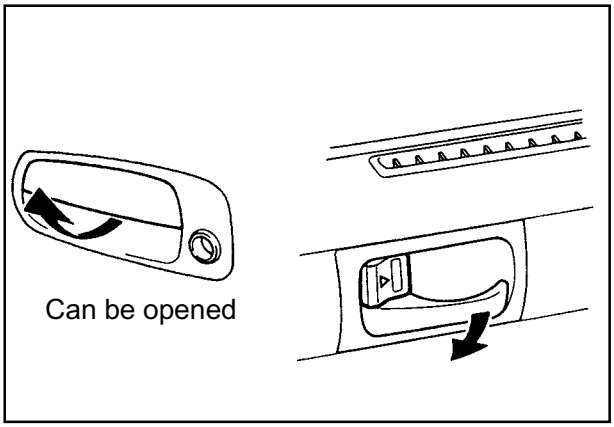

[Manual door lock operation]

HINT: Have all windows open and keep the door key outside the vehicle when checking the door lock system.

2. Check that all doors open and close smoothly using both the outside and inside handle.

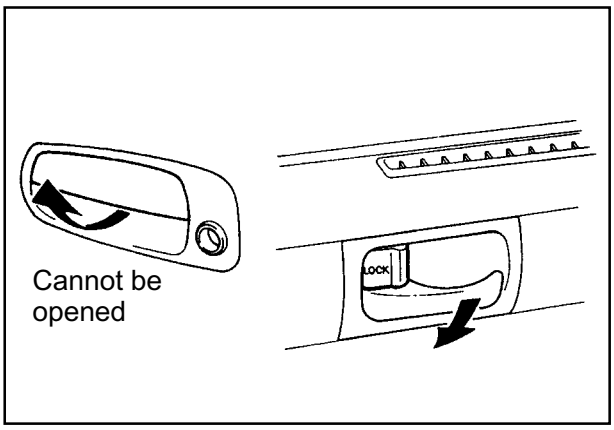

3. Check that the doors cannot be opened when the lock button is in the locked position.

   NOTICE: On some models, the door can be opened with the inside door handle even if the lock button is in the locked position. See the Owner's Manual for details.

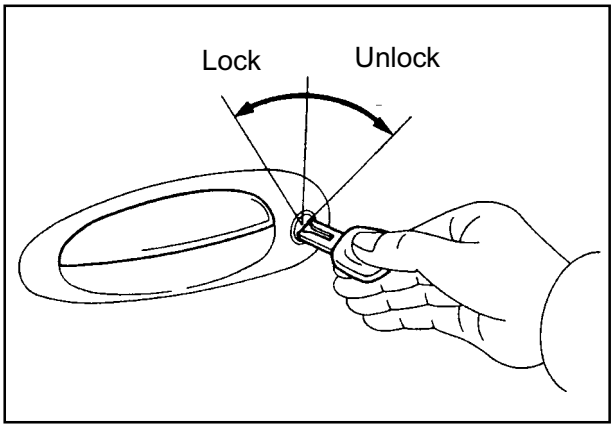

[Power door lock operation]

4. Check that the power door lock control system operates properly.

   (a) Check that all doors lock and unlock with the key.

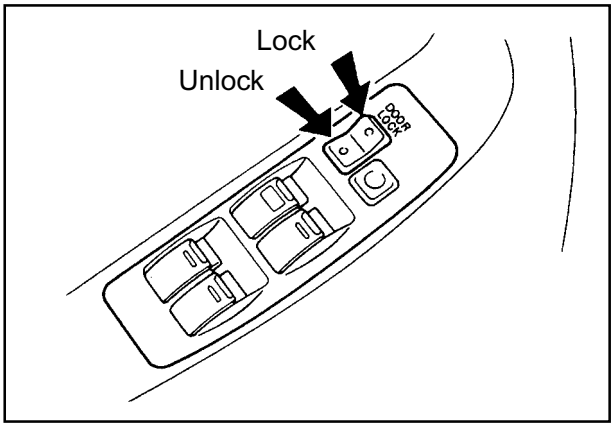

   (b) Check that the all doors are locked and unlocked with the power door lock switch.

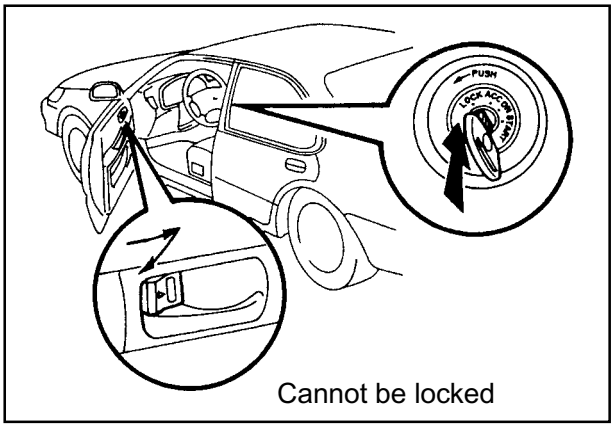

   (c) Key confinement prevention mechanism operation.

   Check that the door is being unlocked when the door lock switch is operated with the key is left in the ignition key cylinder and the driver's door is opened.

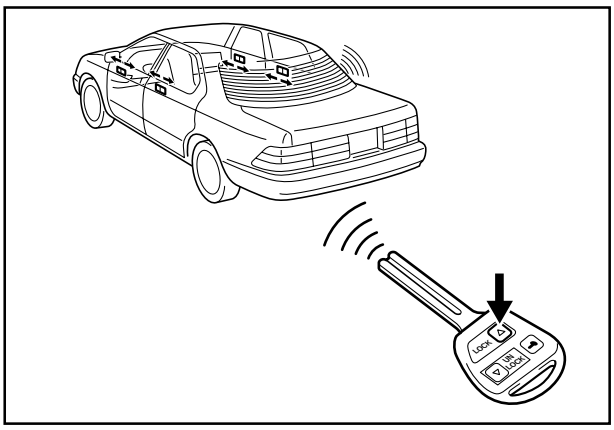

(d) Wireless door lock remote control system

Check that the remote control system operates properly.

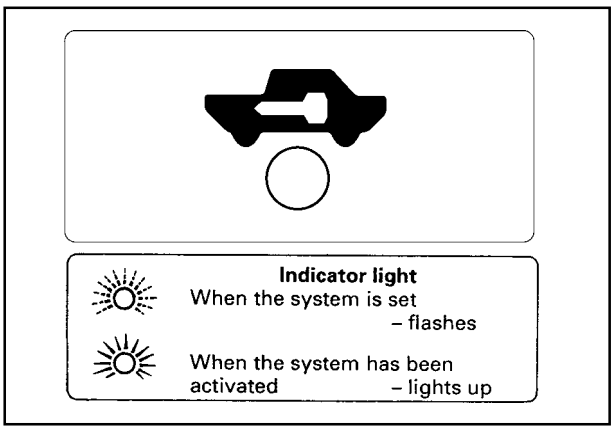

[Theft deterrent system]

5. When doors, hood and trunk are locked, check that the theft deterrent system sets properly.

HINT: The system will be automatically set after 30 seconds elapses.

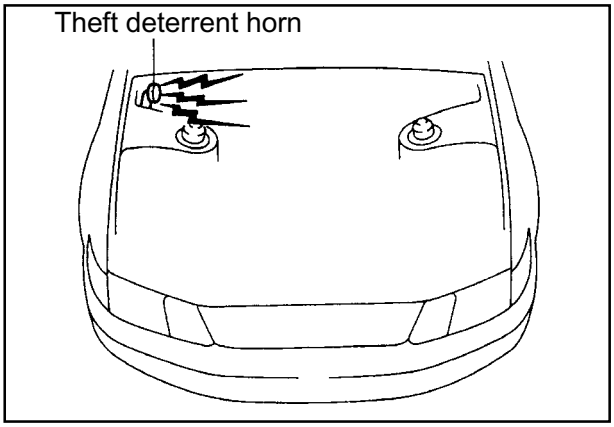

6. Check that the horn operates when the door is unlocked from inside.

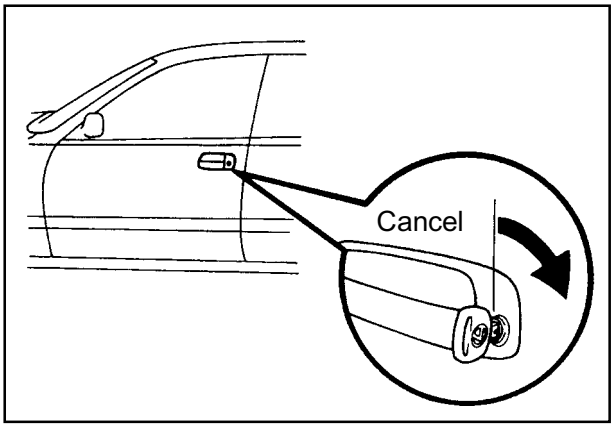

7. Cancel the system by unlocking either door with the key and wireless "UNLOCK" button.

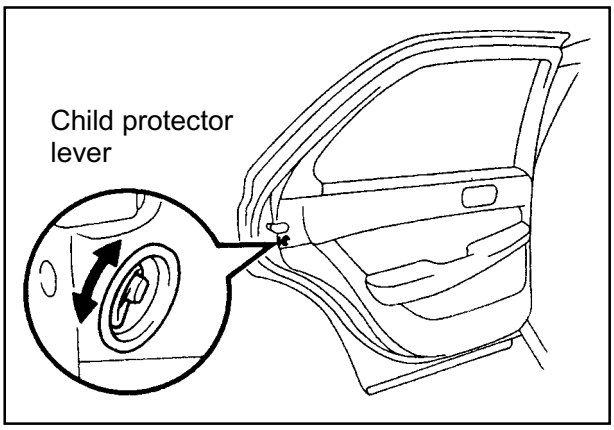

B12. CHECK CHILD PROTECTOR OPERATION

Check that the rear door cannot be opened by the inside handle and can be opened by the outside handle when the child-protector is in the lock position.

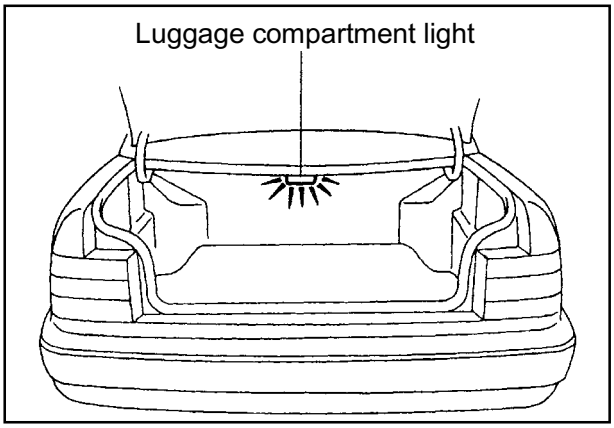

B13. CHECK LUGGAGE COMPARTMENT LIGHT

Check that the light comes on when the trunk lid is opened.

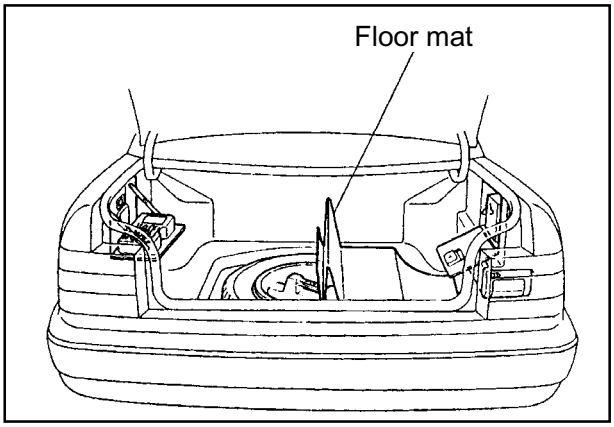

B14. CHECK LUGGAGE COMPARTMENT TRIM AND FLOOR MAT FIT

Visually and manually check the luggage compartment trim and floor mat for proper fit.

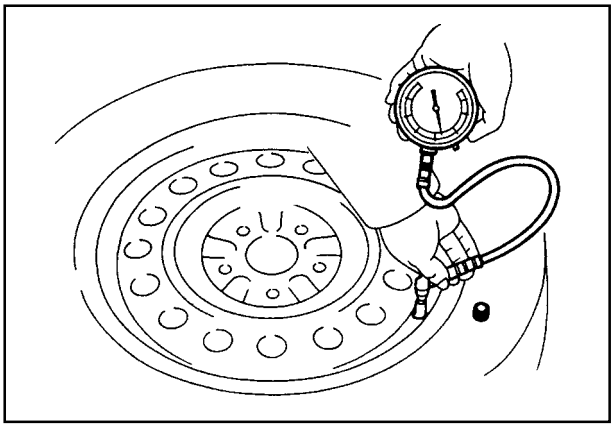

B15. CHECK SPARE TIRE PRESSURE AND INSTALLATION

1. Check and adjust inflation pressure to the load specification.

   HINT: Refer to the Owner's Manual.

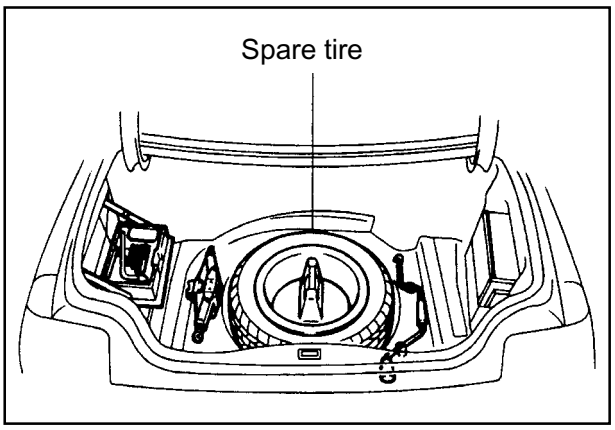

2. Check that the spare tire is in its proper place and securely fastened.

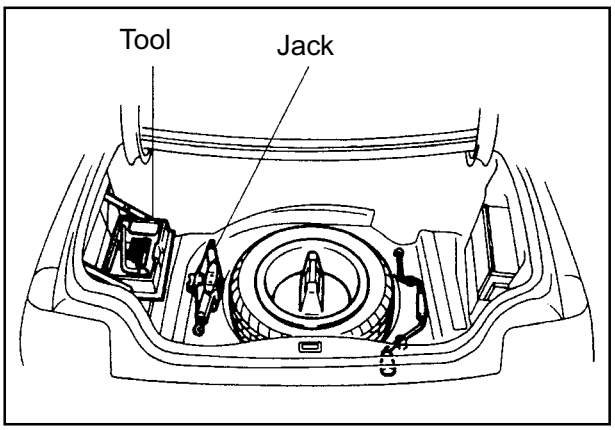

B16. CHECK JACK AND TOOL INSTALLATION

Check that the tool set and jack are in their proper place.

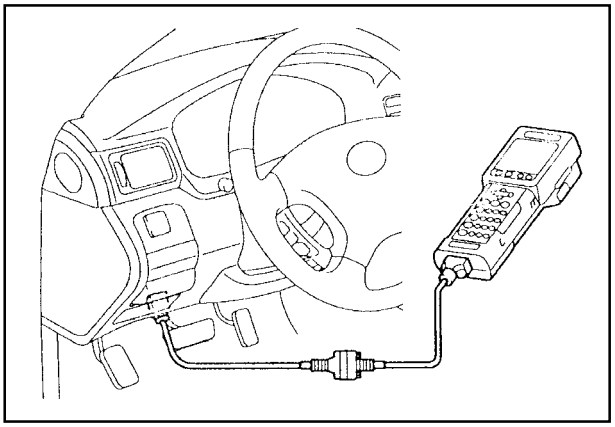

B17. CHECK ON-BOARD DIAGNOSIS SYSTEM

Using the OBD II scan tool (Lexus hand-held tester), check the on-board diagnostic system function.

HINT: For details of this procedure, refer to the Engine Troubleshooting section of the Repair Manual.

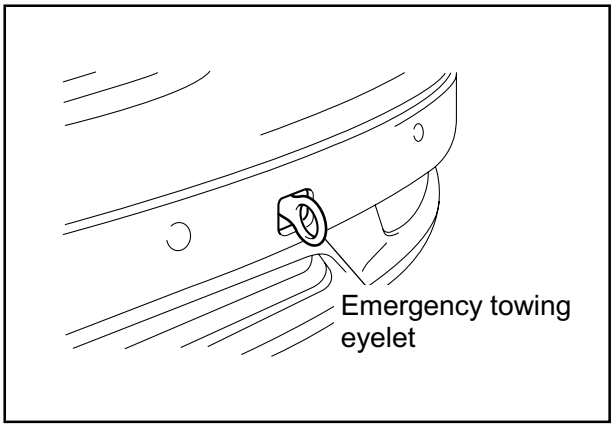

B18. REMOVE EMERGENCY TOWING EYELET

1. Remove the emergency towing eyelet from the front bumper or rear bumper by turning counter-clockwise.

2. Install the cover(s) into emergency towing eyelet hole(s).

   HINT:

   - The cover(s) are stored in the glove compartment, etc.
   - Put the removed emergency towing eyelet into its storage location under the deck board in the luggage compartment.

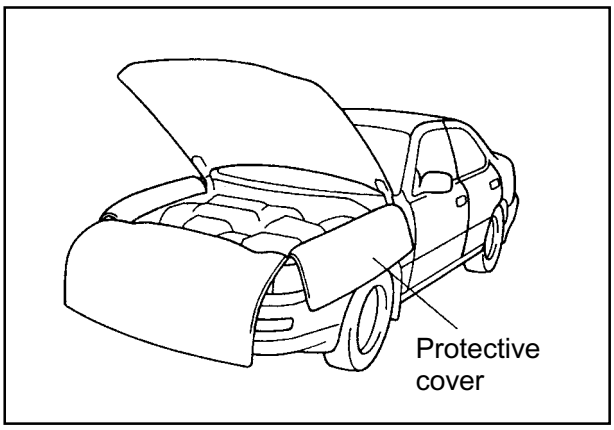

C. ENGINE COMPARTMENT

NOTICE: To protect the paint surface from scratches, protective covers must be used.

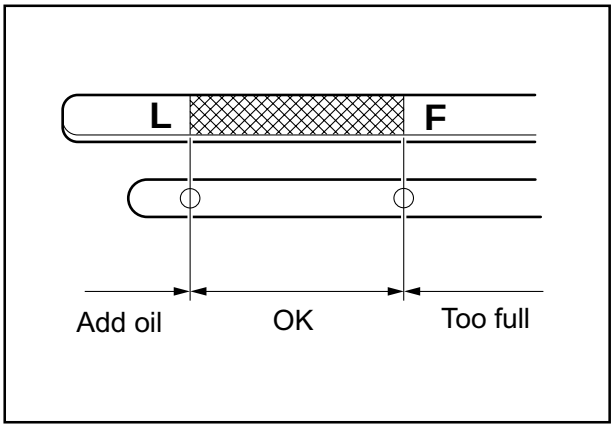

C01. CHECK OIL AND FLUID LEVEL

HINT: If the oil or fluid are too low, check for leakage and add oil or fluid.

- **ENGINE OIL**

1. After warming up the engine and 5 minutes after stopping the engine, check the oil level on the dipstick.
2. Check for dirt or impurities in the oil.

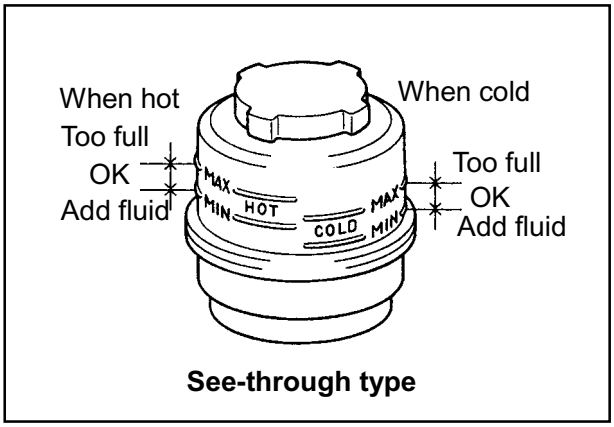

See-through type

- **POWER STEERING FLUID**

Check the fluid level of the reservoir.

(a) When the fluid temperature is hot (60-80°C, 140-175°F), the reading should be in the "HOT" range.
(b) When the fluid temperature is cold (10-30°C, 50-85°F), the reading should be in the "COLD" range.

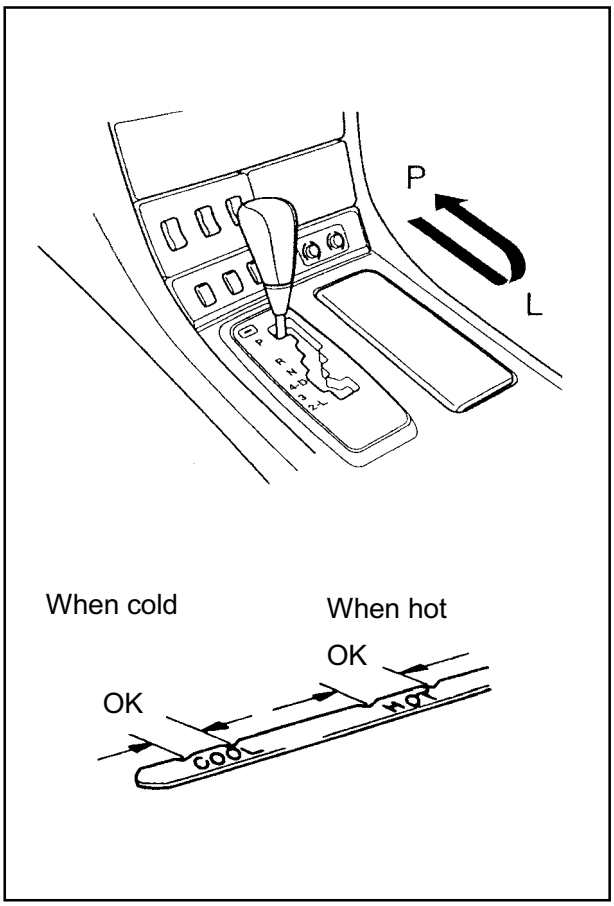

- **AUTOMATIC TRANSMISSION FLUID**

Check the fluid level with the dipstick.

(1) Stop the vehicle on a level surface and apply the parking brake firmly.

(2) With the engine idling, shift the selector lever into each range from "P" through "L", and then shift into "P" range.

(3) After shifting into "P" range and with the engine idling, check the fluid level.

(4) If the fluid level is below the "COLD" range, recheck the fluid level again after the Road Test.

(5) If the fluid level is still below the "HOT" range, add the fluid to the "HOT" range.

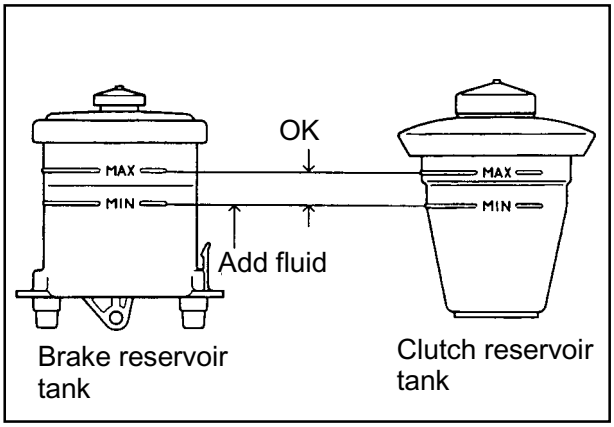

- **BRAKE AND CLUTCH FLUID**

Visually check the fluid level of the reservoir tank.

[With Hydraulic brake booster]

HINT: For vehicle with the hydraulic brake booster, check the brake fluid level as shown below.

1. Turn the ignition switch off.
2. Depress the brake pedal more than 40 times.
3. Check the brake fluid level.

If the fluid level is below the specified level, check for fluid leaks before replenishing the fluid.

HINT: If the brake and clutch reservoir tanks are in the cabin, check them during the WALK-AROUND INSPECTION.

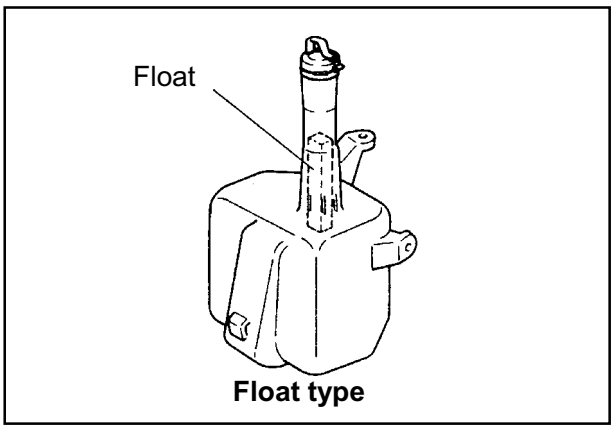

- **WASHER FLUID AND COOLANT**

[Washer fluid]

1. Check the fluid level of the washer tank.

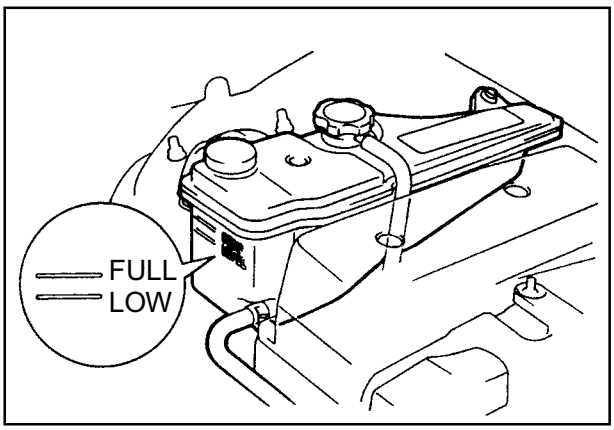

[Coolant]

2. Visually check the coolant level of the reservoir.

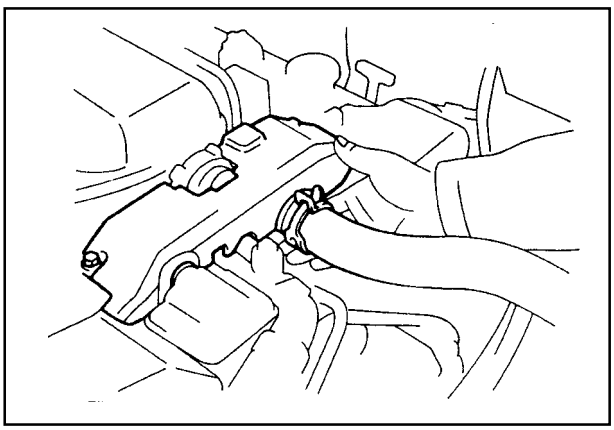

C02. INSPECT FOR FUEL, OIL, COOLANT OR OTHER FLUID LEAKS

1. Visually check each hose and pipe connections for looseness.
2. Look for fuel, oil, coolant or other fluid leaks around the following components:
   (a) Engine
   (b) Power steering pipes and hoses
   (c) Brake pipes and hoses
   (d) Clutch pipes and hoses
   (e) Radiator and its hoses
   (f) Fuel pipes and hoses

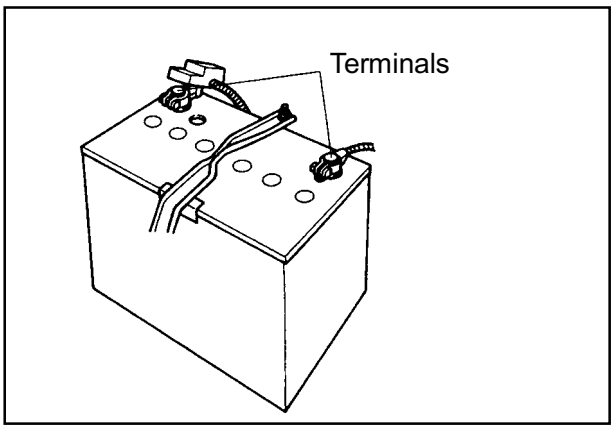

C03. CHECK BATTERY TERMINAL TIGHTNESS

Check that the terminals are tightly connected and the clamps properly installed.

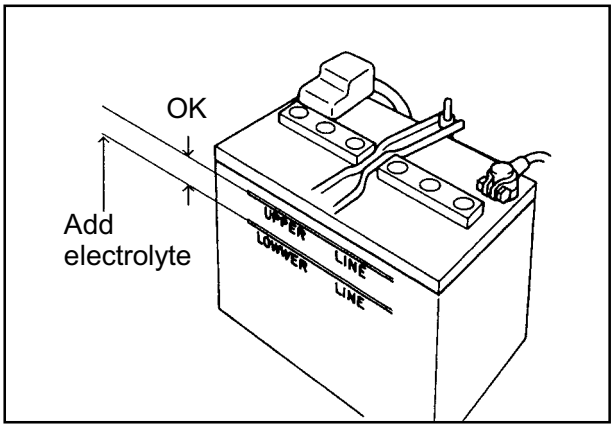

C04. CHECK BATTERY ELECTROLYTE AND CHARGE LEVEL

1. Check the electrolyte level.

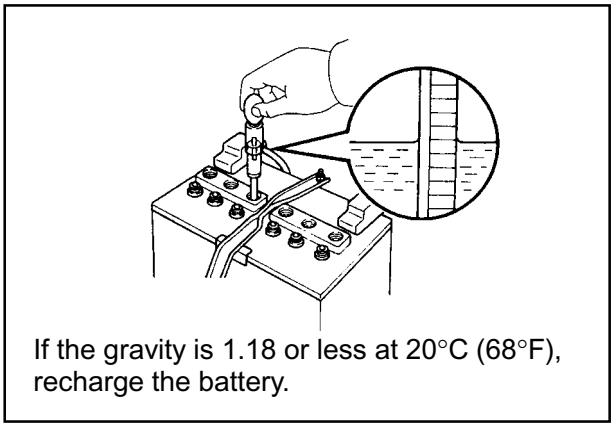

2. Check the battery charge level by checking either the battery gravity of electrolyte or battery voltage.

   (a) Measure the specific gravity with a hydrometer.

   HINT: Take a reading from all cells.

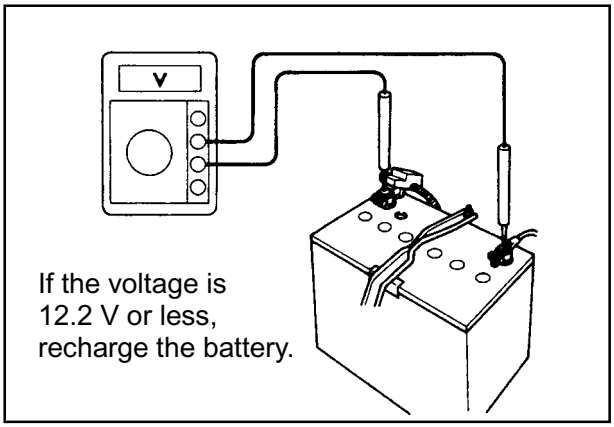

   (b) Measure the voltage with a voltmeter.

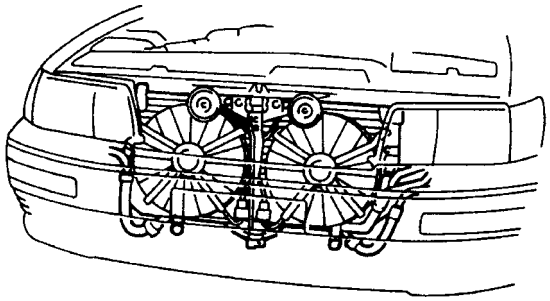

Cooling Fans

C05. CHECK ENGINE AND A/C CONDENSER COOLING FANS

Make sure that the fans rotate smoothly.

NOTE: Do not touch the cooling fans when the engine is operating.

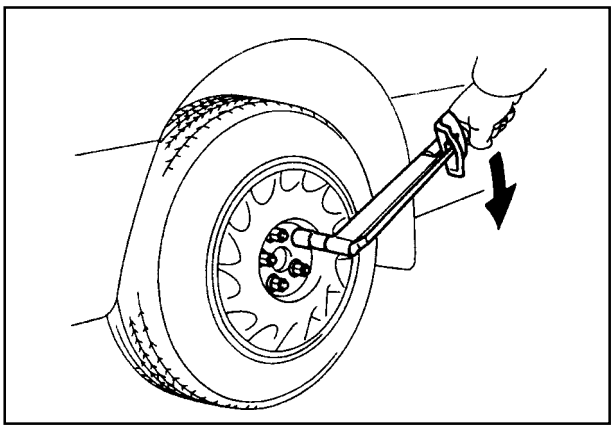

D. UNDER VEHICLE

D01. CHECK WHEEL LUG NUT TORQUE

With a torque wrench, make sure the lug nuts on all the wheels are tightened to the specified torque.

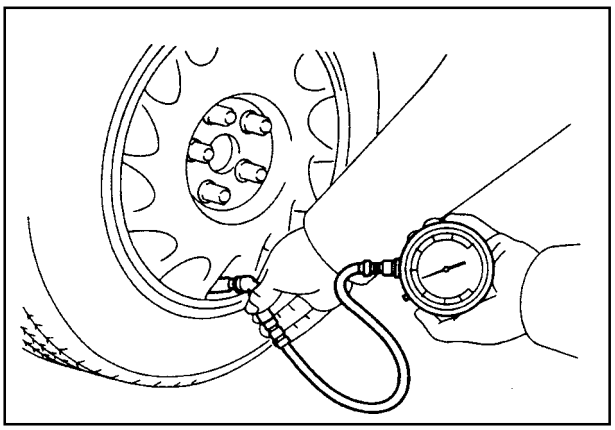

D02. ADJUST TIRE PRESSURE

With the tire pressure gauge, adjust the inflation pressure to the specified pressure.

HINT: Tires must be cold when checked.

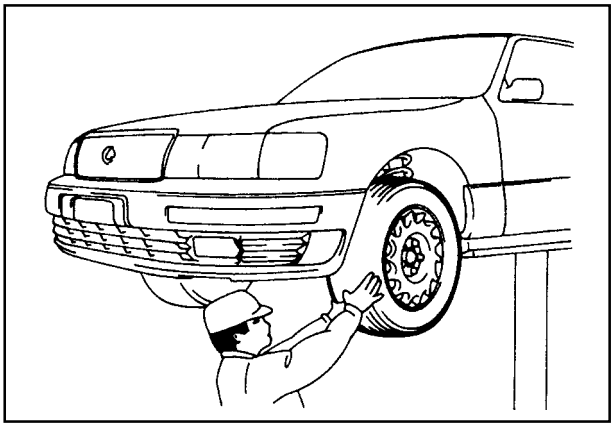

D03. INSPECT TIRES FOR DEFECTS AND DAMAGE

Visually check all tires for defects and/or damage.

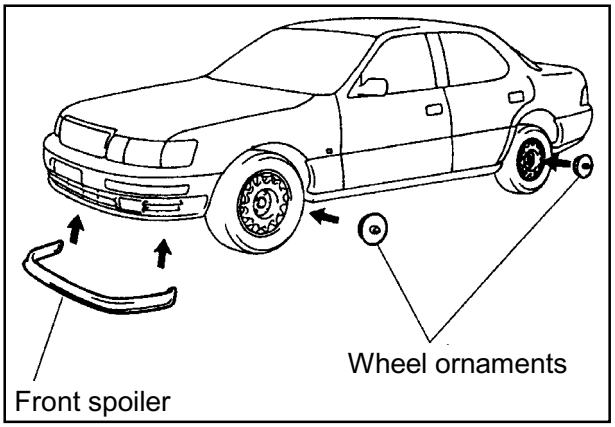

D04. INSTALL THE FACTORY-LOADED PARTS

1. Install the wheel ornaments, front spoiler, etc.

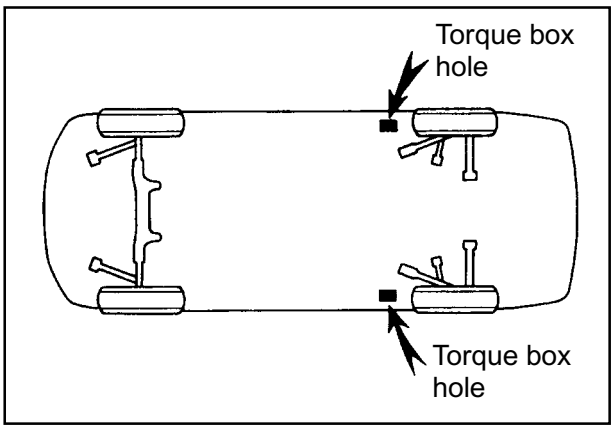

2. Install the rubber body plugs into the torque box holes.

HINT: The plugs are stored in the glove box, etc.

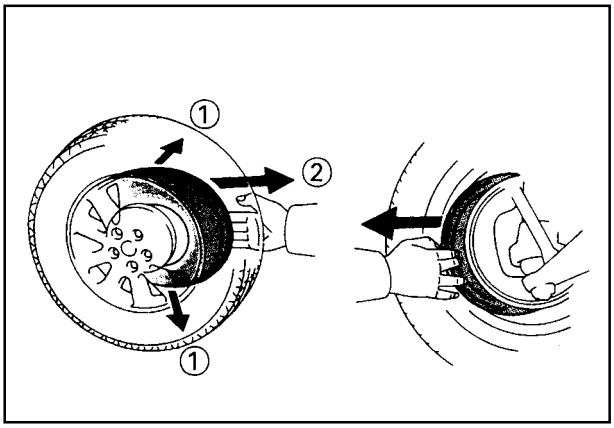

D05. REMOVE DISC BRAKE ANTI-RUST COVERS

Remove the front and rear disc brake anti-rust covers.

(a) The anti-rust covers can be removed by hand from behind without removing the wheels from the vehicle.

(b) The anti-rust covers are used for vehicle transport only.
Never re-install them.

CAUTION: To prevent damage to the disc wheel or the brake rotor, do not use any sharp instruments such as a screwdriver to remove covers.

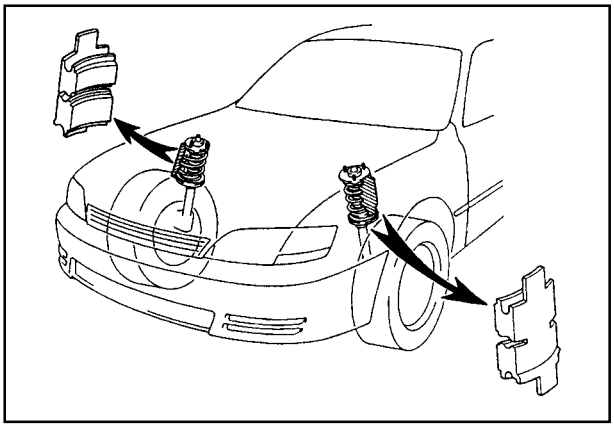

D06. REMOVE FRONT SPRING SPACERS

Remove the front spring spacers from the front suspension coil springs.

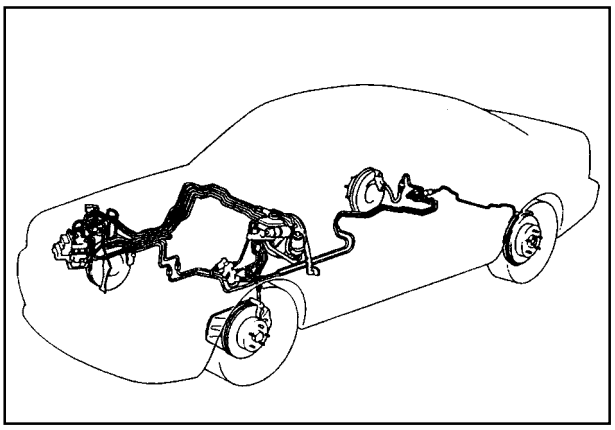

D07. INSPECT FOR FUEL, OIL, COOLANT OR OTHER FLUID LEAKS

Visually check for coolant, fuel, oil and fluid leakage from each of the following components:

(a) Brake pipe line

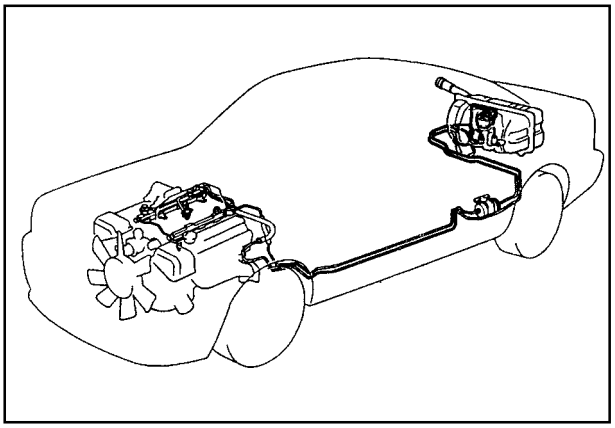

(b) Fuel pipe line

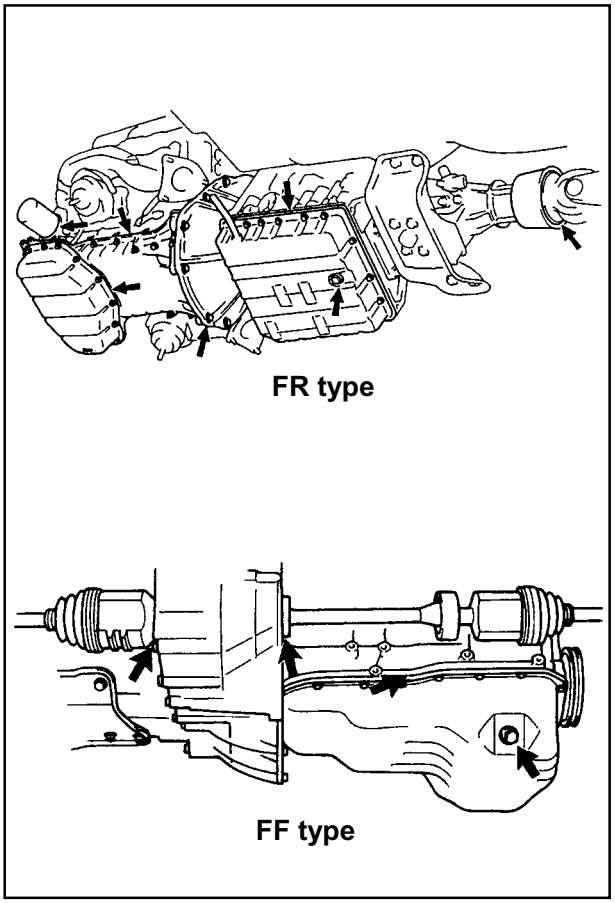

(c) Engine

(d) Transmission

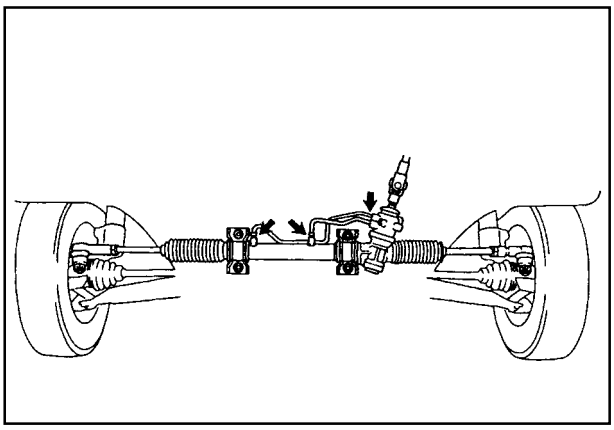

(e) Steering gear box

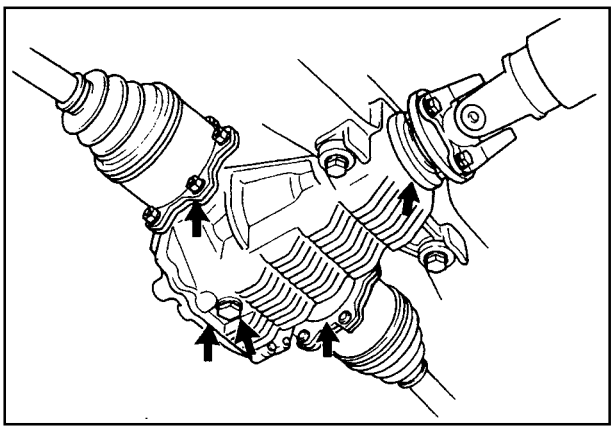

(f) Differential

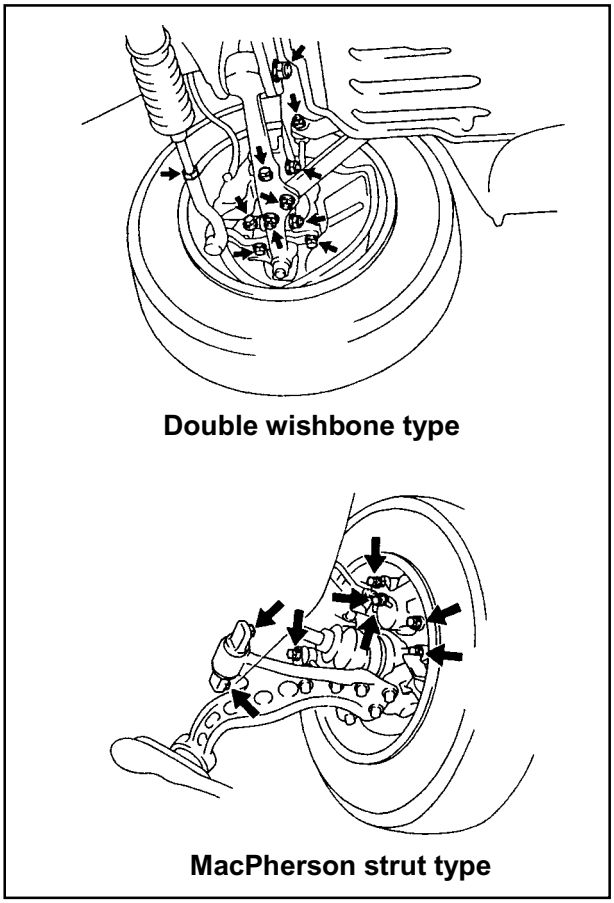

D08. TIGHTNESS OF BOLTS AND NUTS ON CHASSIS AND POWER TRAIN

Check the tightness of bolts and nuts on the chassis and power train.

(a) Front suspension

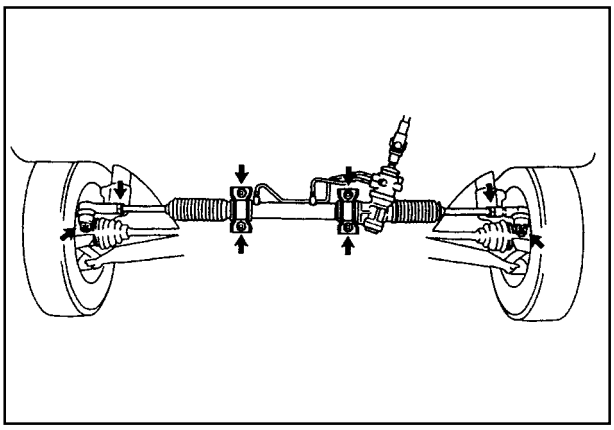

(b) Steering

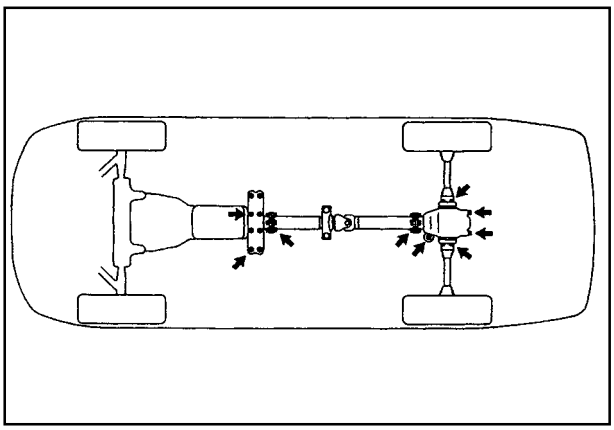

(c) Power train

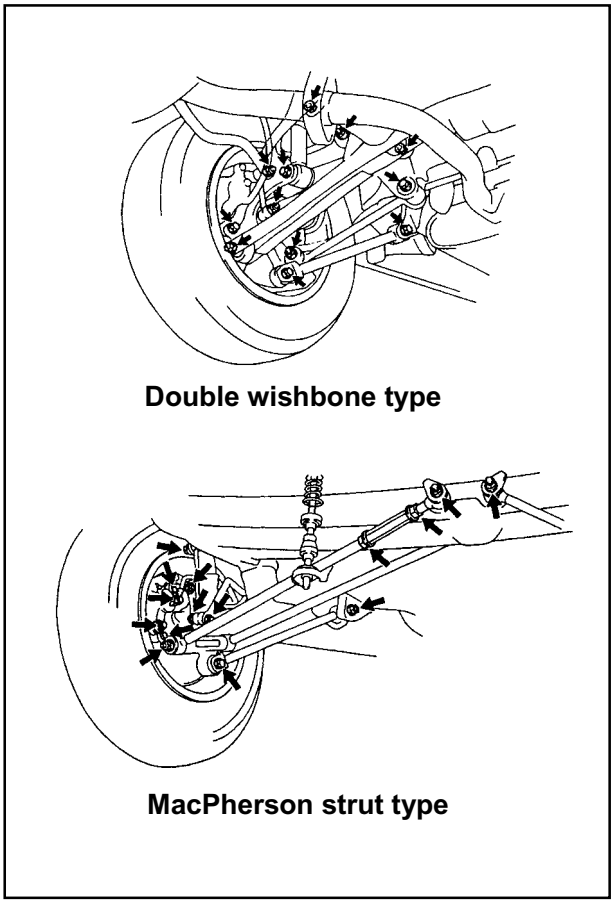

(d) Rear suspension

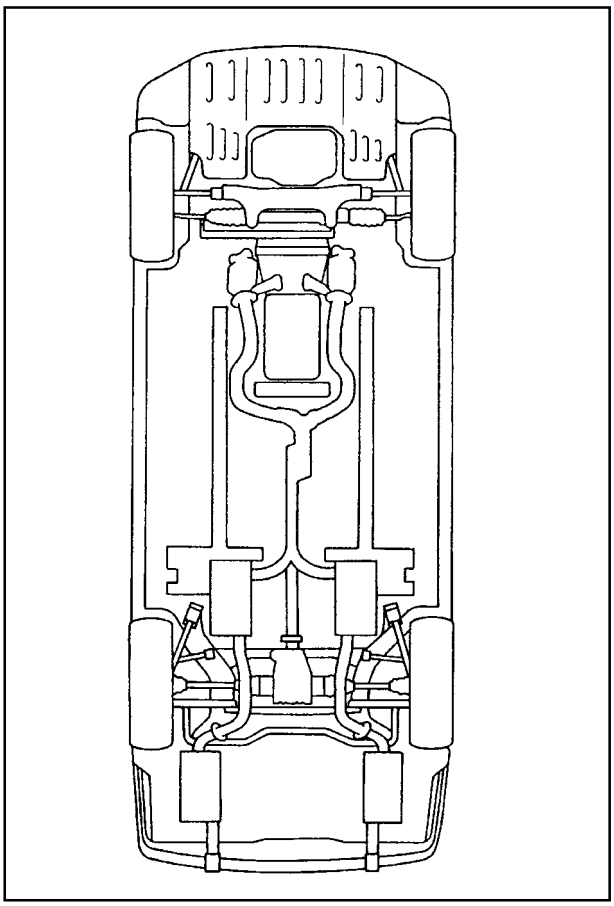

D09. INSPECT UNDER VEHICLE CONDITION FOR DAMAGE, RUST, ETC.

1. Visually and by hand inspect floor panel, exhaust pipe, etc. for damage, rust etc.
2. Visually and manually check the pipe lines, cable, boots and hoses for installation, clamping, connection and damage.
   (a) Brake pipes, hoses and protector
   (b) Fuel pipe, hoses and protector
   (c) Steering linkage with dust boots
   (d) Drive shaft boots
   (e) Parking brake cable

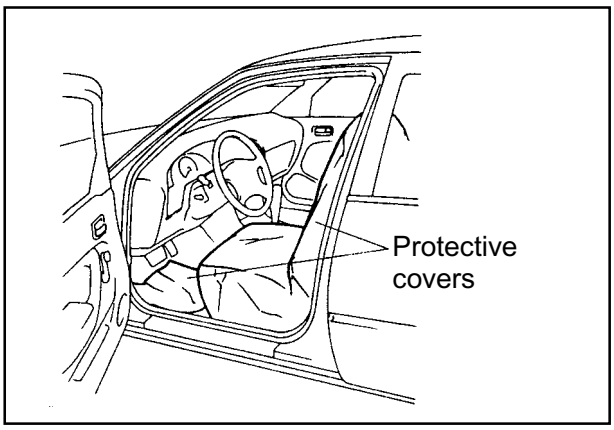

E. ROAD TEST

NOTE: Make sure protective covers are in place on the seats and carpet prior to starting the road test.

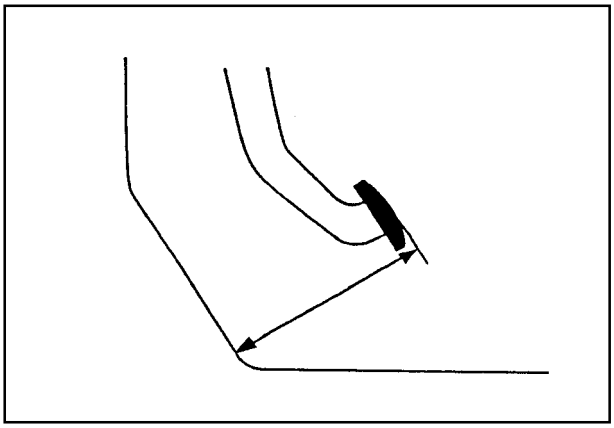

E01. BRAKE AND CLUTCH PEDAL HEIGHT, FREEPLAY AND RESERVE DISTANCE

1. Check the height of the brake and clutch pedals.

   HINT: For details, refer to the Repair Manual.

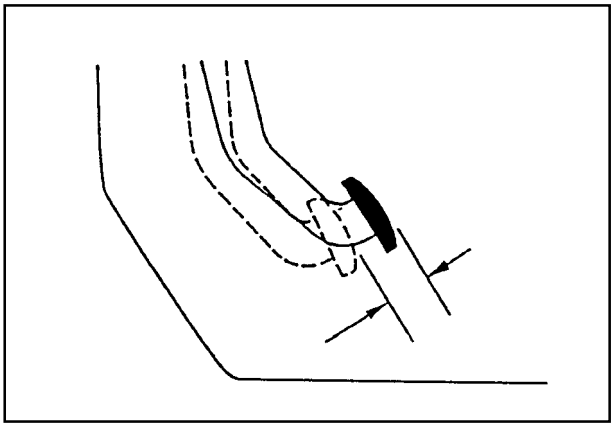

2. Check the freeplay of the brake and clutch pedals.

   HINT: With the engine stopped, reduce the vacuum in the booster by depressing the brake pedal several times.

   For details, refer to the Repair Manual.

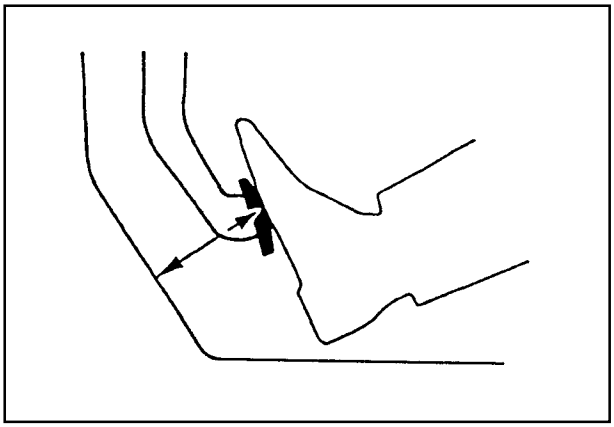

3. Check the brake pedal reserve distance.

   HINT: With the engine running, press hard on the brake pedal.

   For details, refer to the Repair Manual.

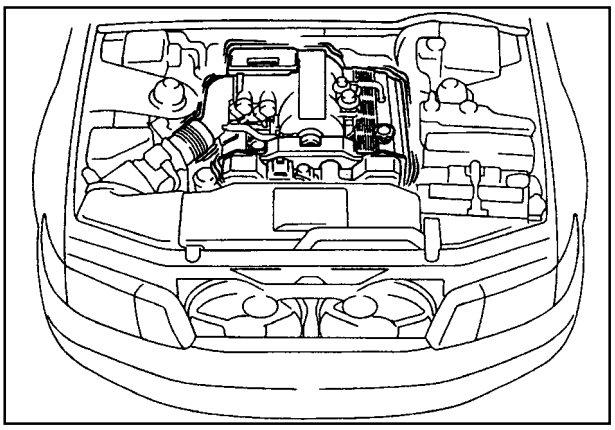

E02. CHECK ENGINE IDLE SPEED AT NORMAL OPERATING TEMPERATURE

Check that the engine idle speed is smooth at normal operating temperature.

(a) Noise and vibration
(b) Rough idle

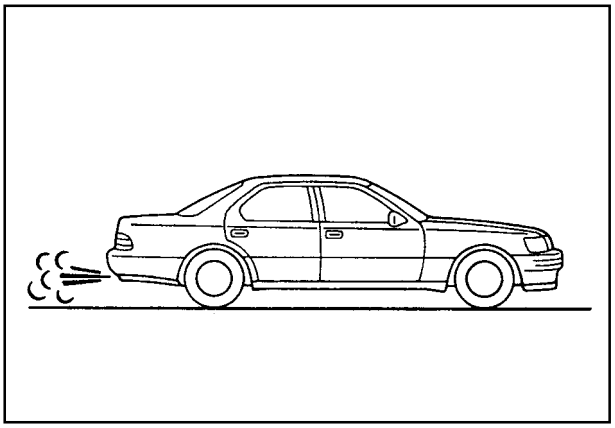

E03. CHECK DRIVING PERFORMANCE AND DRIVEABILITY

1. Check engine performance over a broad range of driving conditions, including acceleration, cruising and deceleration.
2. Check that the engine operation is normal, smooth and responsive.

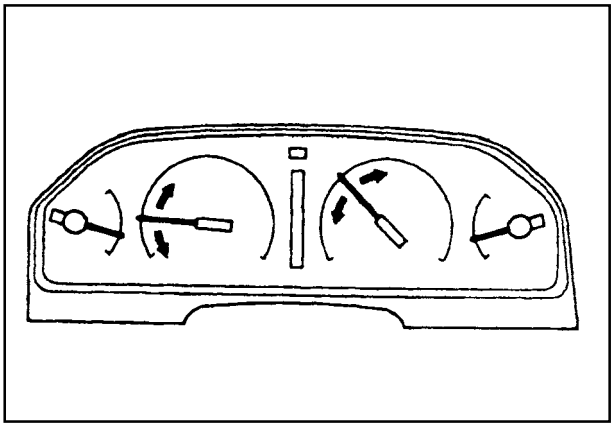

E04. CHECK COMBINATION METER OPERATION

- **Meters and gauges (speed meter, tachometer, water temperature, etc.)**

  Check that the meters and gauges operate properly and move smoothly.

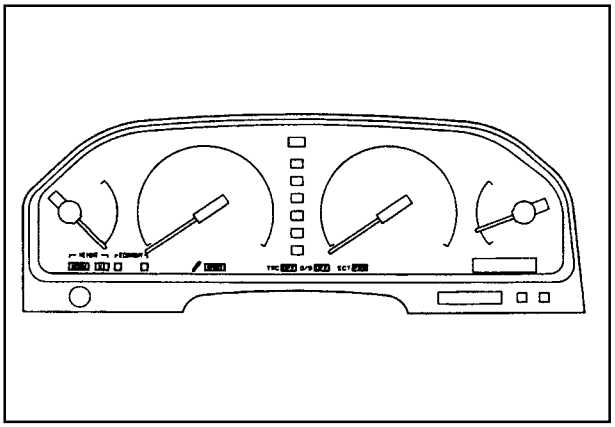

- **Indicator lights (ECT and VSC indicators, etc.)**

  Check that each indicator light comes on properly.

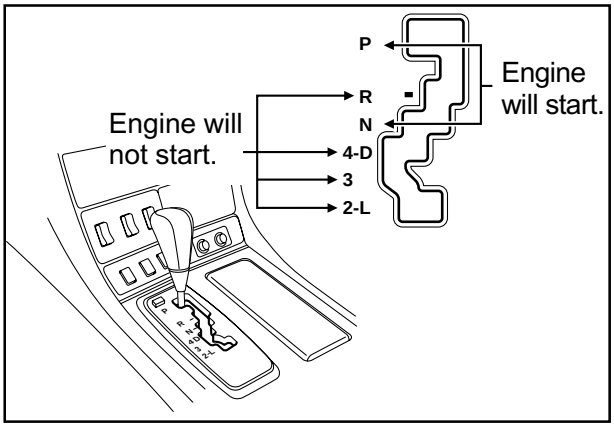

E05. CHECK TRANSMISSION OPERATION

[Automatic transmission]

1. Check that the engine does not start when the shift lever is in any range other than "P" or "N".
2. Check for smooth up-shift and down-shift operation.

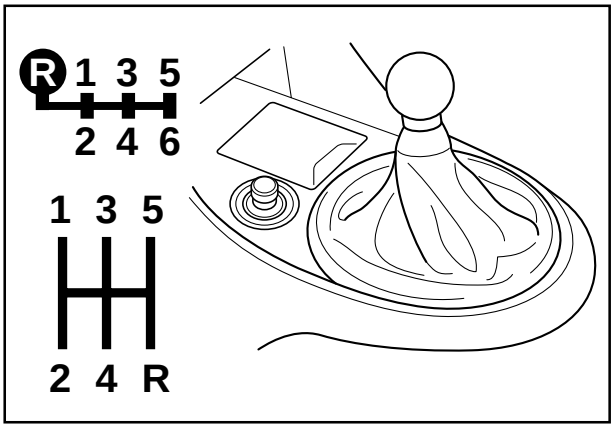

[Manual transmission]

1. The clutch should disengage smoothly and be free of chattering and abnormal noise.
2. Check that the shift lever shifts smoothly.
3. Check that the buzzer sounds when the shift lever is placed in "R" (Reverse).

NOTICE: The buzzer is available with the 6-speed manual transmission only.

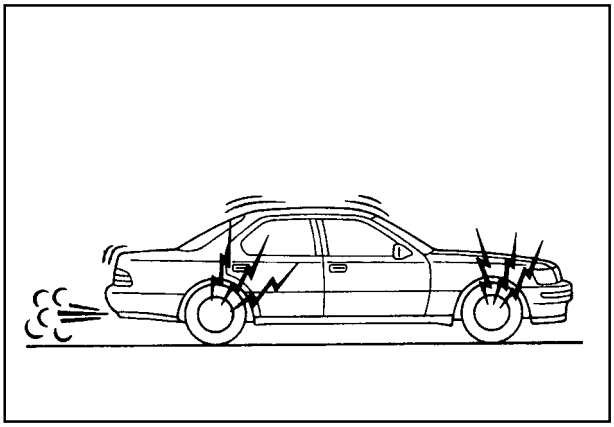

E06. CHECK BRAKE AND PARKING BRAKE OPERATION

1. Check the brake effort, and check for pull to one side and for abnormal squeak.

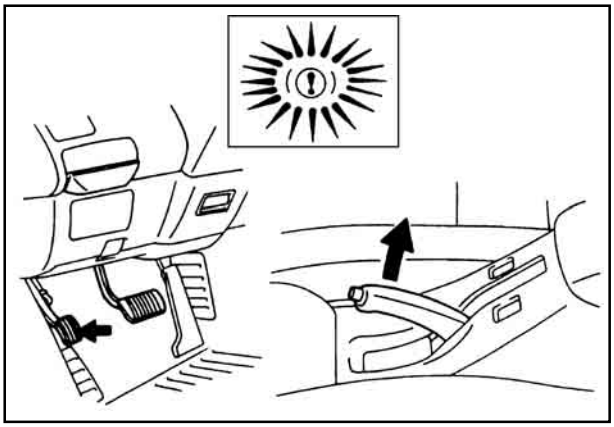

2. Check the parking brake.
   (a) Check the warning light operation.
   (b) Check the travel of the parking brake.

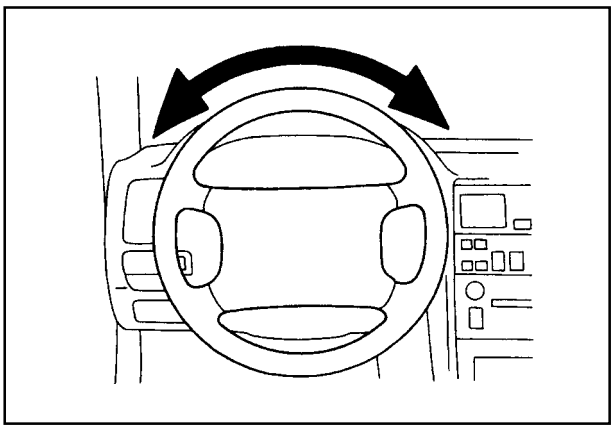

E07. CHECK STEERING OPERATION

1. Check for smooth turning operation and unusual noise.

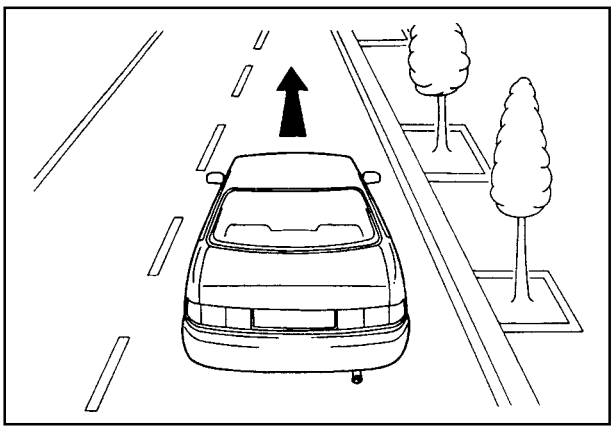

2. Check that the steering wheel is correctly aligned when driving on a level road surface.
3. Check that the vehicle does not pull to one side when driving on a level road surface.

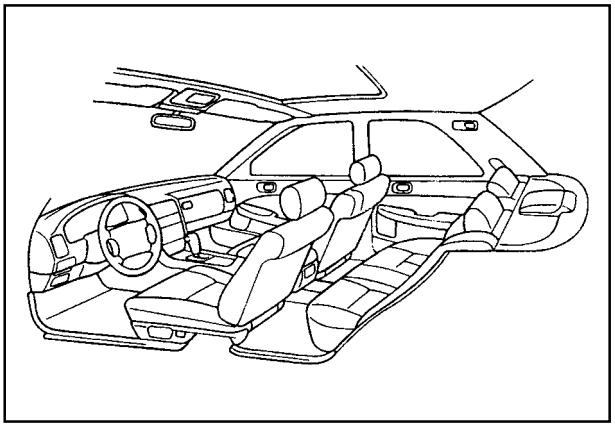

E08. INSPECT FOR ANY ABNORMAL NOISE AND VIBRATION

1. Check for squeaks and rattles.
   (a) Instrument panel
   (b) Door
   (c) Trim
   (d) Others

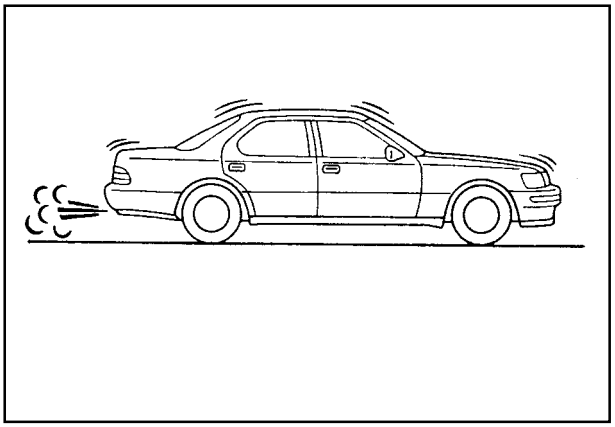

2. Check for abnormal noise and vibration while the vehicle is in motion.
   (a) Power train (engine, transmission, differential, drive shaft, etc.)
   (b) Wind noise

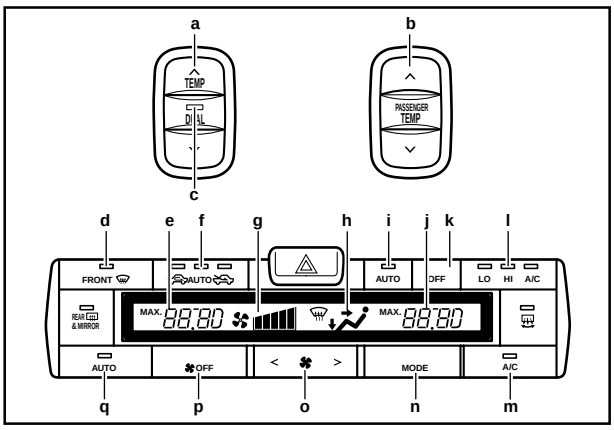

E09. CHECK HEATER AND A/C OPERATION

1. Check that each control operates smoothly.

   (a) Temperature selector
   (with the "DUAL" button on; for driver and rear passengers)
   (with the "DUAL" button off; for driver and all passengers)
   (b) Passenger side temperature control button
   (c) Separate/dual control button
   (d) Front windshield button
   (e) Driver side temperature display
   (in degrees Centigrade)
   (f) Air intake control button
   (g) Fan speed display
   (h) Air flow display
   (i) Rear automatic control button
   (j) Passenger side temperature display
   (in degrees Centigrade)
   (k) Rear off button
   (l) Rear lo-hi air conditioning button
   (m) Air conditioning on-off button
   (n) Air flow control button
   (o) Fan speed control button
   (p) OFF button
   (q) Automatic control button

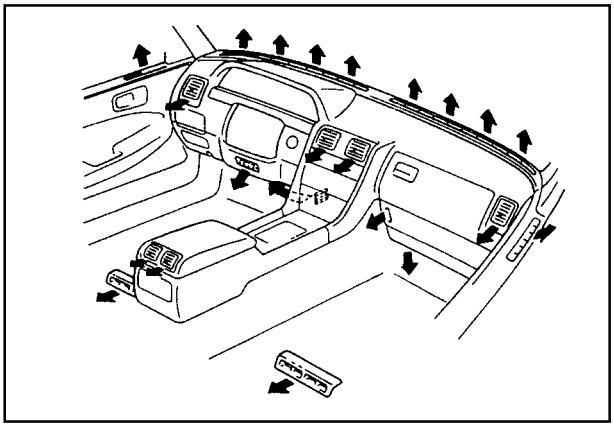

2. Check that the air flow changes in accordance with the air flow mode control switch.

   (a) Front side

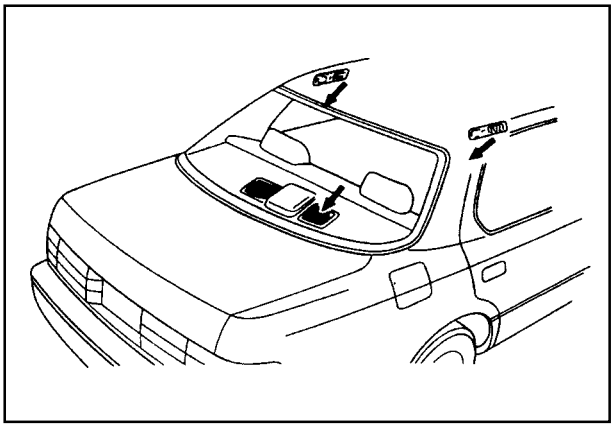

   (b) Rear side

   HINT: For detail, refer to the Owner's Manual.

OP

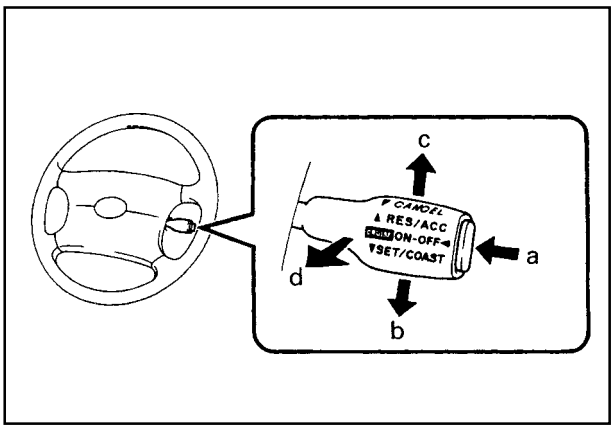

E10. CHECK CRUISE CONTROL OPERATION

1. Check cruise control function.
   (a) MAIN SWITCH
   (b) SET/COAST
   (c) RESUME/ACCEL
   (d) CANCEL

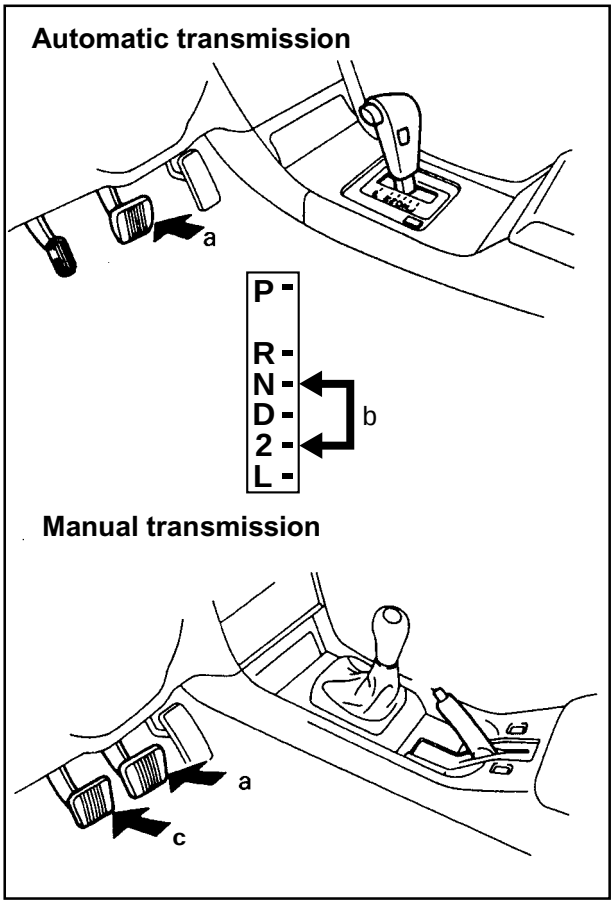

2. Check that the cruise control speed is cancelled by:
   (a) Depressing the brake pedal
   (b) Shifting the selector lever to "N" and "2" range
   (c) Depressing the clutch pedal

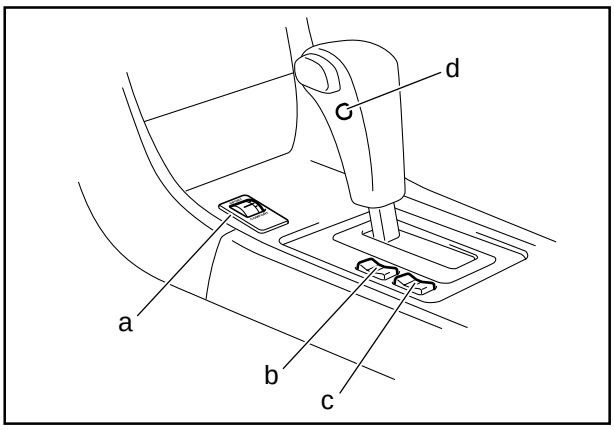

F. FINAL INSPECTION

F01. SET THE FUNCTIONAL CONTROL SYSTEM SWITCHES

Set the functional control system switches in the following position.

(a) Electronic modulated suspension switch set in "in the city traffic" mode.
(b) Vehicle height control switch set in "NORMAL" mode.
(c) ECT switch set in "POWER" mode.
(d) O/D switch set in "ON".

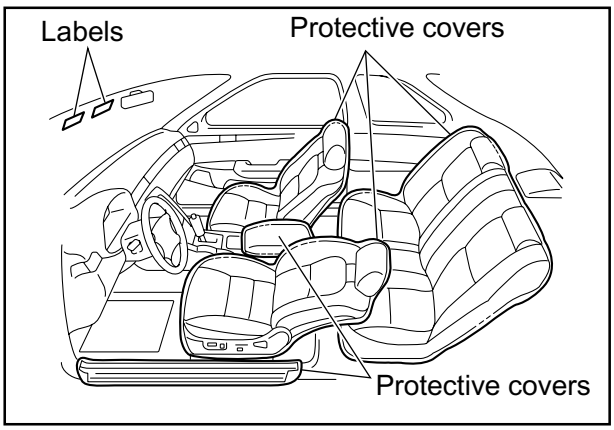

F02. REMOVE UNNECESSARY LABELS, TAGS, STICKER, ETC.

HINT: Remove the interior protective covers just before delivery to the customer.

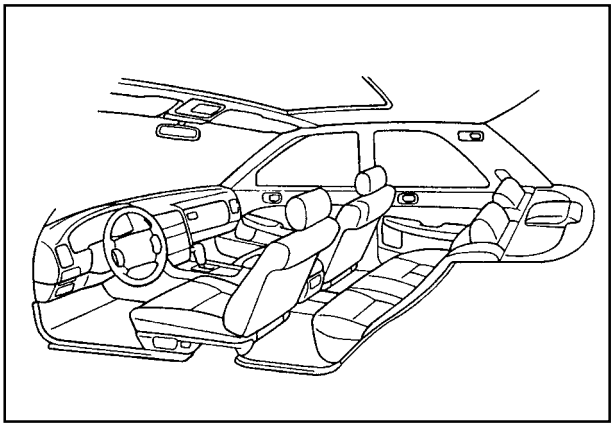

F03. VISUALLY INSPECT ALL INTERIOR PARTS FOR INSTALLATION, DAMAGE, FIT, DIRT, ETC.

Check the appearance of the interior parts visually and by hand.

Check for:

(a) Dirt
(b) Scratches (superficial, sub-surface scratches, chipping)
(c) Damage
(d) Fit and alignment

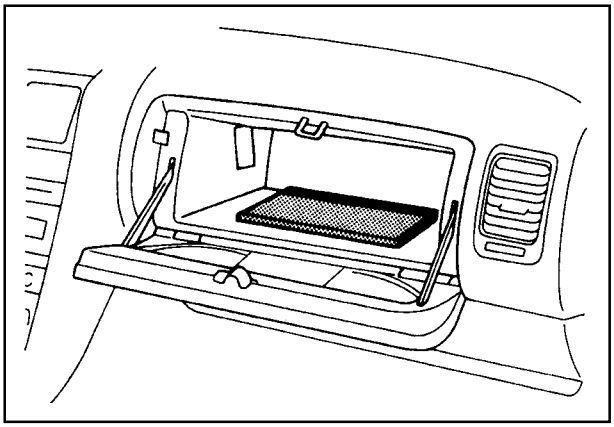

F04. CHECK OWNER INFORMATION MATERIALS

Check that the following manuals are placed in the glove compartment.

(a) Owner's Manual
(b) Others

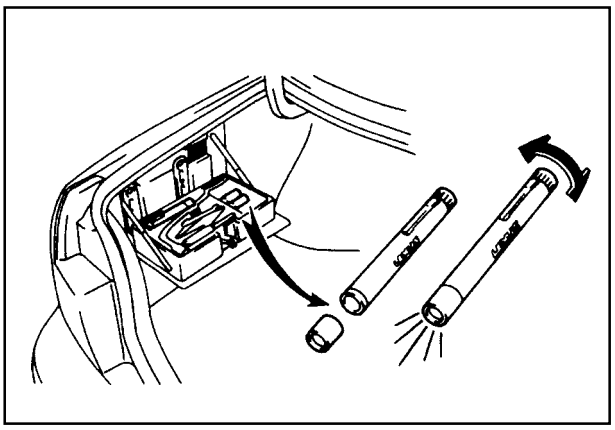

F05. CHECK PENLIGHT AND DRY CELL BATTERY

1. Make sure the penlight and its dry cell battery in the tool box.
2. Visually check the dry cell battery for leaks.

HINT: The dry cell battery is stored in the tool box, separately from the penlight.

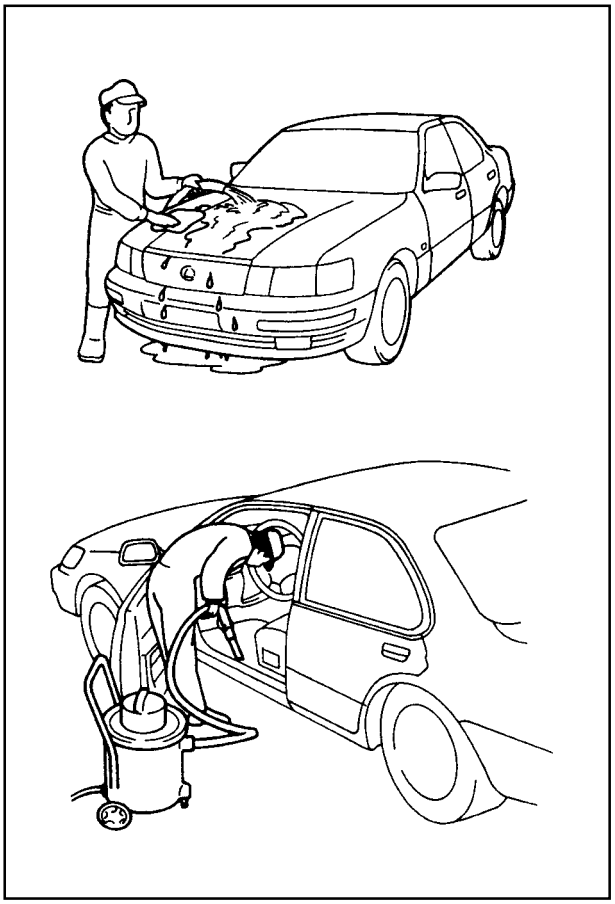

F06. WASH AND CLEAN VEHICLE

Wash and clean the body exterior and interior thoroughly.

HINT: We recommend you to wash and clean the vehicle by hand.

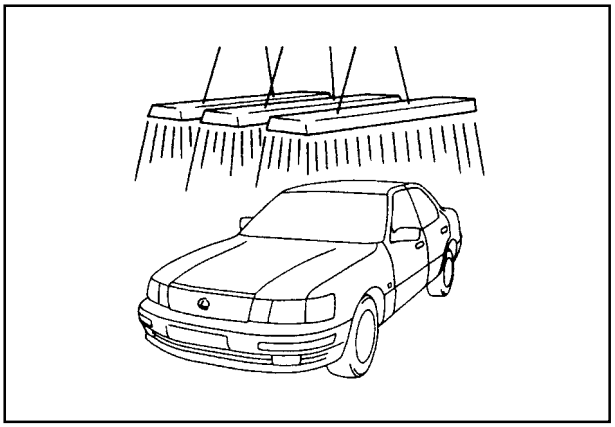

F07. INSPECT PAINT FINISH FOR SCRATCHES, CHIPS, DAMAGE, ETC.

1. Illumination in the paint inspection area should be more than 800 lux on the top and side surfaces of vehicle body.

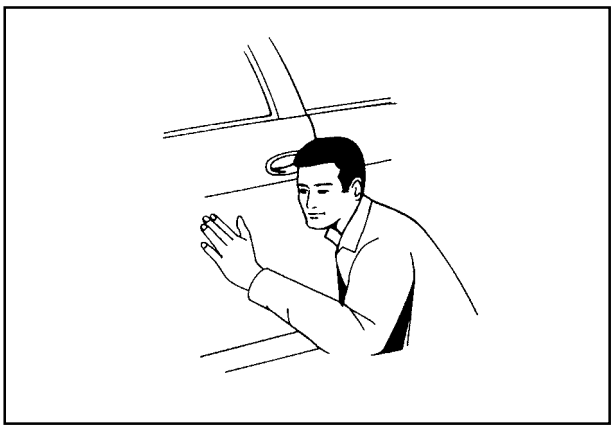

2. Check each panel visually and by hand.
   (a) Scratches (superficial, sub-surface scratches, chipping)
   (b) Dents
   (c) Blemishes

   HINT: Damage in found more easily by looking at an oblique angle.

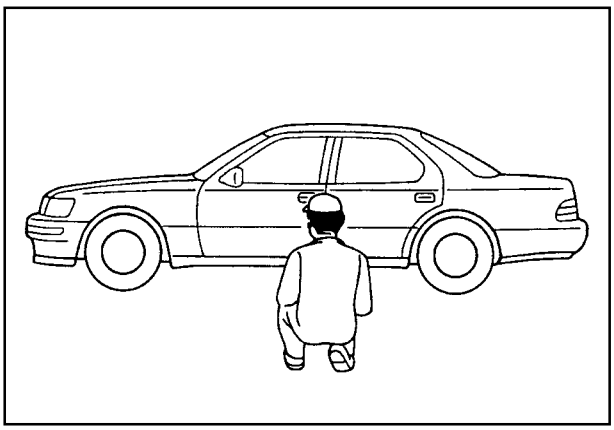

F08. INSPECT EXTERIOR BODY PARTS FOR PROPER INSTALLATION, DAMAGE, RUST, ETC.

Check all exterior parts visually and by hand.

(a) Scratches (superficial, sub-surface scratches, chipping)
(b) Molding and bumper for damage, floating and looseness.

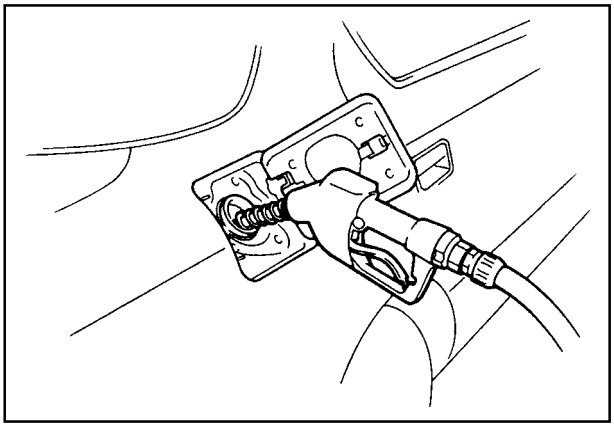

F09. FULL UP THE FUEL TANK

Fill with the specified fuel to the "FUEL" level.

– MEMO –

4. VEHICLE DELIVERY INSPECTION

Page

A. CHECK..... 56

B. PREPARATION FOR DELIVERY..... 56

A. CHECK

A01. Installation of fuse(s)

A02. Washer fluid level

A03. Engine startability for battery condition (If the vehicle is stored over one month, the specific gravity of battery must be measured.)

A04. Audio system and clock for pre-setting

A05. Vehicle interior for dirt and scratches

A06. Vehicle exterior for scratches and rust

A07. Tires for deformation and defect

A08. Installation of dealer installed parts

A09. Installation of loaded parts (jack, tools and manuals)

B. PREPARATION FOR DELIVERY

B01. Remove the following parts :

- Plastic door edge protectors
- Seat and door trim protection covers
- Floor carpet protection covers (paper)
- Step covers
- Other covers

B02. Clean the vehicle interior

NOTE: After PDS, perform a final inspection of the parts of each respective area to ensure that the parts have not deteriorated.

OVERSEAS CUSTOMER SERVICE TECHNICAL DIVISION
TOYOTA MOTOR CORPORATION

PRINTED IN JAPAN
First Printing: May 1992
First Revision: April 2002