TOYOTA

Vehicle Delivery Quality Improvement

PRE-DELIVERY SERVICE MANUAL for HYBRID VEHICLES

TOYOTA MOTOR CORPORATION

FOREWORD

This manual has been prepared for the Pre-Delivery Service (PDS) of hybrid vehicles.

This is the Hybrid vehicle edition of the “Pre-Delivery Service Manual” of the VDQI guidebook, which is available separately.

Hybrid vehicles are powered by both gasoline engine and electric motor.

This manual includes PDS procedures specific to hybrid vehicles.

Please read this manual carefully and understand the contents fully so that each technician will be able to properly perform the Pre-Delivery Service on hybrid vehicles.

Apart from the PDS procedures, maintenance procedures for HV battery and auxiliary battery are also included in this manual.

To prevent the deterioration of the HV battery and the auxiliary battery after the vehicle is put into storage, thoroughly read the battery maintenance section at the end of this manual.

TOYOTA MOTOR CORPORATION

INTRODUCTION

Page

MAIN POINTS OF INSPECTION..... 2

THE IMPORTANCE OF BEING THOROUGHLY FAMILIAR WITH THE OWNER'S MANUAL..... 2

GENERAL PRECAUTIONS 3

MAIN POINTS OF INSPECTION

Inspect all areas that can be checked visually and by hand.

1. Inspection by eye and hand

   a. Paint Finish
   b. Scratches
   c. Rust
   d. Dirt
   e. Discoloration
   f. Deformation
   g. Fit

2. Functional Inspection

   a. Check for proper operation
   b. Check for smooth operation
   c. Check for noise or vibration

If any of the inspection items listed above has revealed a malfunction, appropriate actions must be taken before delivering the vehicle to the customer.

THE IMPORTANCE OF BEING THOROUGHLY FAMILIAR WITH THE OWNER'S MANUAL

Some features and functions of the vehicles differ from model to model. Even within the same model, features and functions could vary depending on the grade or the intended destination of the vehicle.

Because this manual is intended for covering all hybrid vehicles, the PDS operation consists primarily of inspections of widely available mechanisms and features. Therefore, to ensure the complete PDS inspection of a given model, it is necessary for the PDS technician to be thoroughly familiar with the Owner's Manual of that particular model and to know the proper operation of the functions and features.

GENERAL PRECAUTIONS

When performing a PDS, always follow the guidelines explained below in order to protect new vehicles from scratches and dirt

- Always wear a clean, well-fitting uniform and keep your shoes free of dirt and mud.
- Keep your uniform free of belt buckles, buttons, watches, rings and key chains.
- Never carry tools in your pocket.
- Keep your fingernails short.

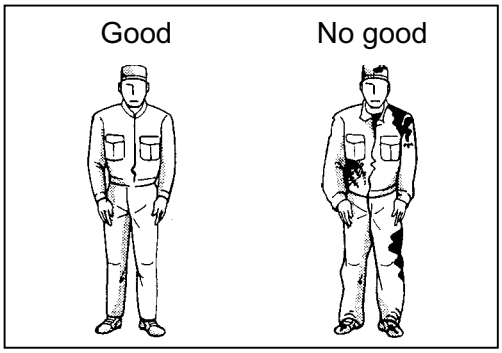

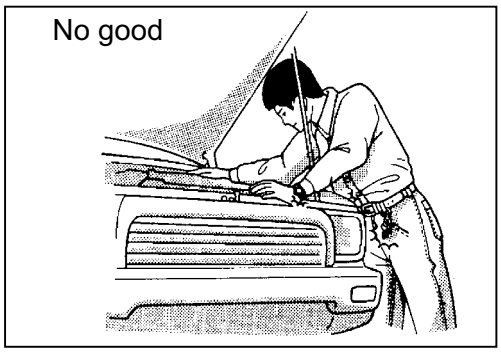

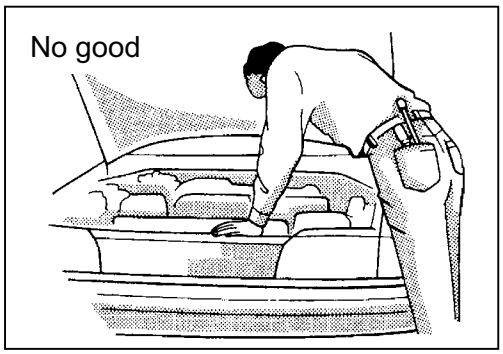

- Always keep your hands clean. If your hands become dirty, wipe them immediately.
- Do not enter the cabin compartment with dirty shoes.

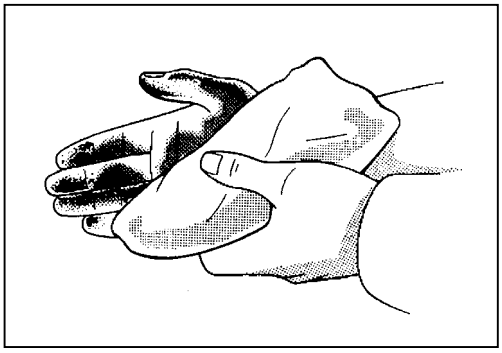

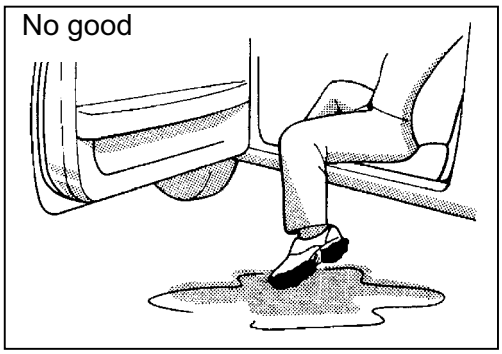

GENERAL PRECAUTIONS (cont'd)

- The inspection area should be clean and well lit.
- The inspection area should have enough space to prevent damage to the vehicle when the doors are opened.
- Before performing engine compartment inspection, be sure to place fender and grille covers on the vehicle.

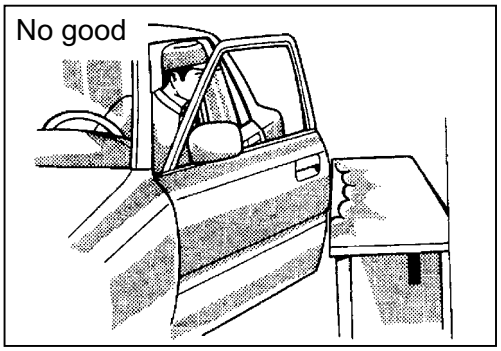

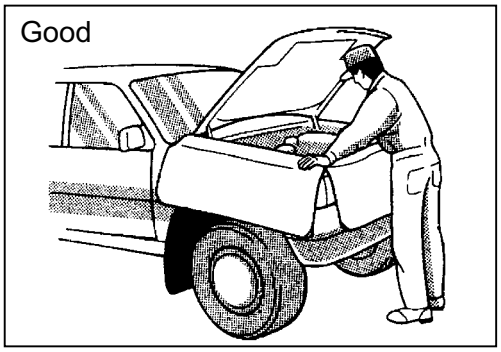

- Take care to protect body and trim parts that must be installed during PDS.
- To protect the paint surface from scratches, do not put parts on the hood, truck lid or roof.

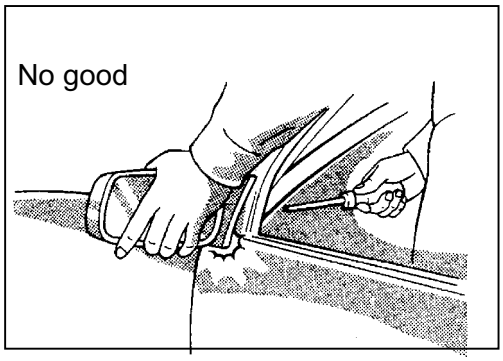

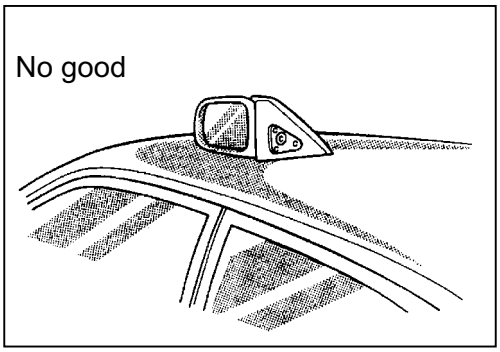

PRECAUTIONS FOR HYBRID VEHICLES

Page

PRECAUTIONS SPECIFIC TO HYBRID VEHICLES..... 6

PRECAUTIONS SPECIFIC TO HYBRID VEHICLES

The following precautions must be heeded to prevent damage to the vehicle and injury to the technician when performing PDS on hybrid vehicles. Thoroughly read and comprehend the following information before performing PDS on hybrid vehicles.

- The vehicle is equipped with orange colored cables connected to the hybrid vehicle battery which contains a high voltage (about 200-500 V) and to other high voltage parts.
  Do not carelessly touch the orange colored cables.
- An electric motor, coolant radiator and some other parts reach high temperatures during inspection. Caution labels are applied to these parts. Carefully observe the instructions on these caution labels.
- To park the vehicle, make sure to press the “P” position switch. If the shift lever is in the “N” position, the HV battery will not charge even if the gasoline engine is operating.The hybrid transaxle employs a electronic shift lever. After the shift lever is moved into any position, it will return to the home position when it is let go. Make sure to check the position of the shift lever on the indicator.
- When leaving the vehicle, after pressing the “P” position switch, apply the parking brake and press the “POWER” switch in order to stop the hybrid system (the “READY” light is off).
- An air vent is installed in the back frame of the right rear seat in order to cool the hybrid vehicle battery. Do not block this air vent, as it may cause the hybrid vehicle battery to overheat, reducing the output of the hybrid system.
- Keep water away from the electric components in the engine compartment.

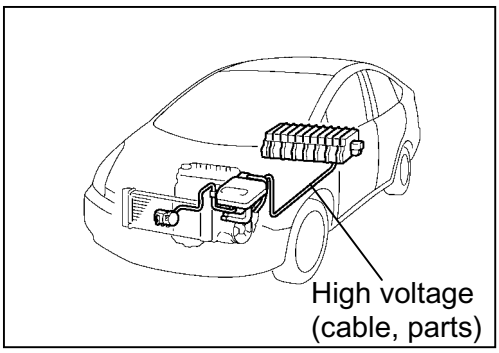

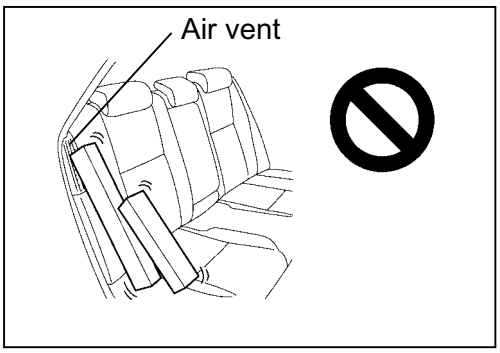

PDS ITEMS

Page

A. BEFORE INSPECTION 8

B. ENGINE COMPARTMENT 8

C. INTERIOR AND EXTERIOR INSPECTION 8

D. UNDER VEHICLE 11

E. ROAD TEST 12

F. FINAL INSPECTION AND CLEANING 12

This manual describes work procedures that ensure efficient operations.

Pages 8 through 12 present the inspection items of the Pre-Delivery Service. For the details of each inspection procedure, please refer to PDS OPERATION starting on page 13.

A. BEFORE INSPECTION

See pages 14 to 15

A01. Prepare required gauges and protective covers

A02. Install required fuse(s) or short pin*

A03. Initialization of electrical system parts, etc.

A04. Install factory-loaded parts* (antenna, etc.)

* Inspect or install when equipped/required

B. ENGINE COMPARTMENT

See pages 16 to 17

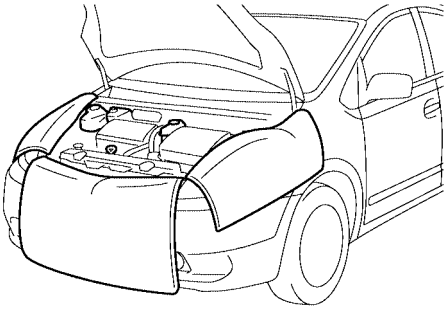

B01. Check engine oil level

B02. Check washer fluid level

B03. Check brake fluid level

B04. Check inverter coolant and engine coolant level

B05. Inspect for fuel, oil, coolant or other fluid leaks

C. INTERIOR AND EXTERIOR INSPECTION

See pages 18 to 49

Starting at the driver's door, check the following items while walking around the vehicle in a counter-clockwise direction (if it is R.H.D, walk around the vehicle in a clockwise direction).

C01. Check power supply changeover and immobilizer system*

C02. Check hybrid system start ("READY" light on)/stop (READY light off)*

C03. Check immobilizer system*

C04. Check engine operation

C05. Check indicators, warnings and buzzers*

* Inspect or install when equipped/required

C. INTERIOR AND EXTERIOR INSPECTION (cont'd)

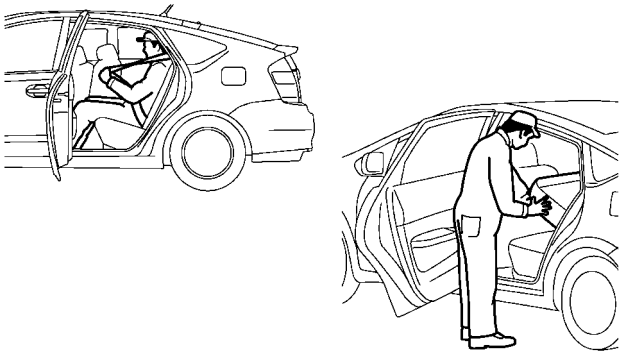

C06. Check tail and license plate lights and parking lights operation*

C07. Check headlights operation

C08. Check high-low beams/flashing high beam operation

C09. Check turn signals operation

C10. Check emergency flashers operation

C11. Check front fog lights operation *

C12. Check rear fog lights operation *

C13. Check headlight beam level control system operation*

C14. Check headlight cleaner operation*

C15. Check stop lights/high mounted stop light operation

C16. Check back-up lights operation

C17. Check instrument panel lights operation

C18. Check dimmer operation *

C19. Check wipers and washers (front and rear) operation*

C20. Check horn sound operation

C21. Check tilt and telescopic steering wheel operation and steering lock operation*

C22. Check power window operation*

C23. Check operation of power door lock switch*

C24. Check operation of outside mirrors

C25. Check operation of inside mirror

C26. Check operation of garage door opener*

C27. Check sunroof or moon roof operation*

C28. Check interior lights operation *

C29. Check multi-information display/navigation system*

C30. Check warning message

C31. Check audio system operation *

C32. Check front heater and A/C operation*

* Inspect or install when equipped/required

C. INTERIOR AND EXTERIOR INSPECTION (cont'd)

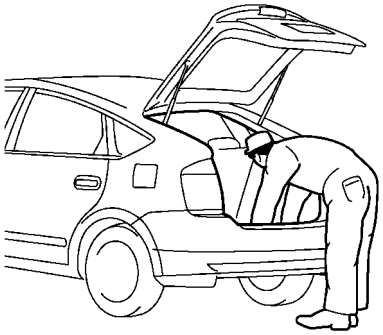

C33. Check km/h / MPH display changeover*

C34. Check clock operation *

C35. Check seat heater operation*

C36. Check cigarette lighter operation *

C37. Check glove box doors, console box door, cup holder, auxiliary boxes operation

C38. Check power outlet operation

C39. Check driver's seat and driver's seat belt operation*

C40. Check operation of fuel filler door and hood lock release lever

C41. Check operation of doors and door locks

C42. Check operation of wireless door lock remote control system

C43. Check operation of smart entry & start system*

C44. Check operation of theft deterrent system*

C45. Check child protector operation

C46. Check rear seats and rear seat belt operation

C47. Check luggage compartment light*

C48. Check luggage compartment trim and floor mat fit

C49. Remove emergency towing eyelet*

C50. Check jack and tool installation

C51. Check tire repair kit installation*

C52. Check spare tire pressure and installation

C53. Check 12-volts auxiliary battery terminal tightness

C54. Check 12-volts auxiliary battery electrolyte and charge level

C55. Check passenger's seat and passenger's seat belt operation

C56. Adjust tire pressure

* Inspect or install when equipped/required

D. UNDER VEHICLE

See pages 50 to 53

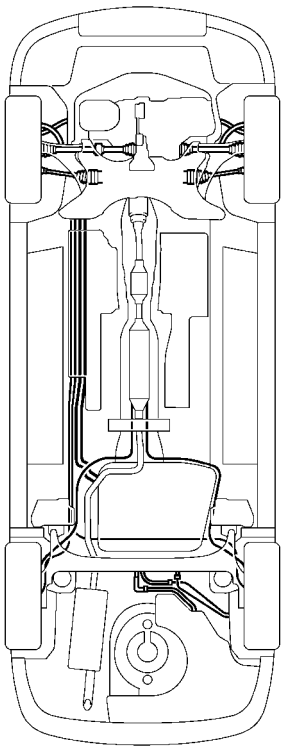

D01. Check wheel hub nut torque

D02. Inspect tires for defects and damage

D03. Inspect for fuel, oil, coolant or other fluid leaks

D04. Inspect tightness of bolts and nuts on chassis and power train

D05. Check hybrid transaxle oil level

D06. Inspect under vehicle condition for damage, rust, etc.

* Inspect or install when equipped/required

E. ROAD TEST

See pages 54 to 58

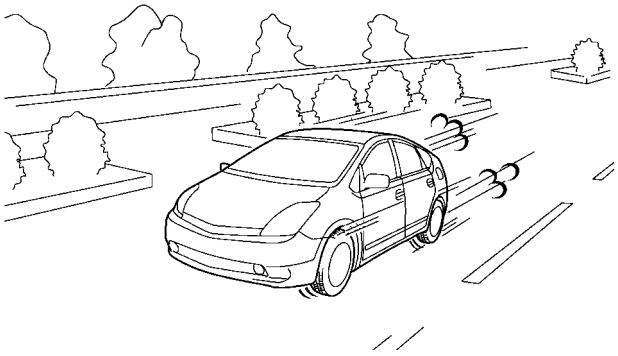

E01. Check brake pedal height, free play and reserve distance

E02. Check engine operation at normal operating temperature

E03. Check driving performance and driveability

E04. Check EV - drive operation*

E05. Check combination meter operation and indicator lights*

E06. Check steering operation

E07. Inspect for any abnormal noise and vibration

E08. Check operation of hybrid transaxle

E09. Check brake and parking brake operation

E10. Check cruise control operation*

* Inspect or install when equipped/required

F. FINAL INSPECTION AND CLEANING

See pages 59 to 61

F01. Remove unnecessary labels, tags, stickers, etc.

F02. Visually inspect all interior parts for installation, damage, fit, dirt, etc.

F03. Check owner information materials

F04. Remove wheel film*

F05. Wash and clean vehicle

F06. Inspect paint finish for scratches, chips, damage, etc.

F07. Inspect exterior body parts for proper installation, damage, rust, etc.

* Inspect or install when equipped/required

PDS OPERATION

Page

A. BEFORE INSPECTION 14

B. ENGINE COMPARTMENT 16

C. INTERIOR AND EXTERIOR INSPECTION 18

D. UNDER VEHICLE 50

E. ROAD TEST 54

F. FINAL INSPECTION AND CLEANING 59

This manual has been prepared as a general manual for hybrid vehicles.
It includes some illustrations and work procedures that are specific to the Prius.

A. BEFORE INSPECTION

A01. PREPARE REQUIRED GAUGES AND PROTECTIVE COVERS

Prepare the following gauges and protective covers.

(a) Hydrometer

(b) Digital voltmeter

(c) Tire pressure gauge

(d) Seat covers

(e) Fender covers

(f) Floor covers

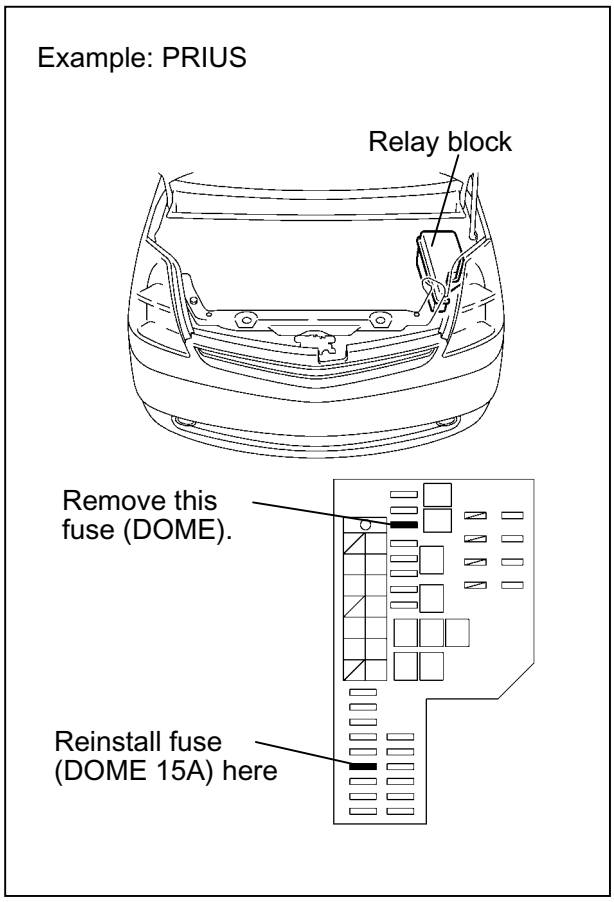

A02. INSTALL REQUIRED FUSE(S) OR SHORT PIN

Install the fuse (s) or short pin prior to beginning the inspection.

HINT: The fuse(s) or short pin are stored in a specified location for each vehicle. (Refer to the Service Bulletin.)

When installing/removing the fuse(s), make sure to keep the following precautions to prevent key confinement in case the theft deterrent system operates.

- The key should not be kept in the key slot before installing the fuse(s).
- One of the door windows should be open before installing or removing the fuse(s).
- Door lock should be in the unlocked position before removing the fuse(s).

A03. INITIALIZATION OF ELECTRICAL SYSTEM PARTS, ETC.

HINT : For the initializing procedures for each system, refer to the Service Bulletin for each model.

Initialize the following systems.

- Power window
- Moon roof
- Adaptive front-lighting system
- Compass
- Others

A04. INSTALL FACTORY- LOADED PARTS

HINT :

- For the installation procedures for factory-loaded parts, refer to the Service Bulletin for each model.
- From Section B, Engine Compartment onward, the inspection procedures in this manual assume that the factory-loaded parts have all been installed on the vehicle.

Install the factory-loaded parts prior to beginning the inspection.

(a) Front spoiler

(b) Door mirror

(c) Radio antenna

(d) Wheel caps/covers

(e) Rubber body plugs

(f) Rear lower side spoiler

(g) Others

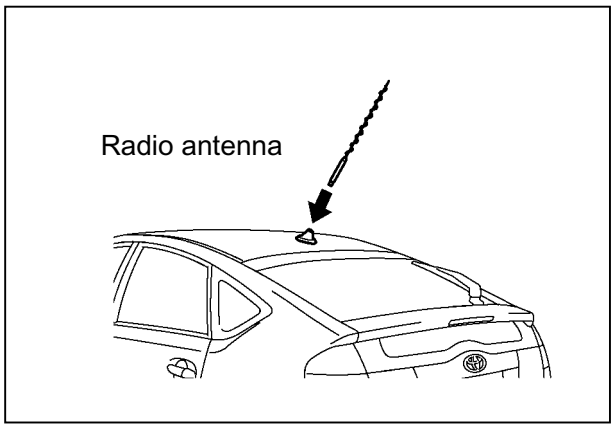

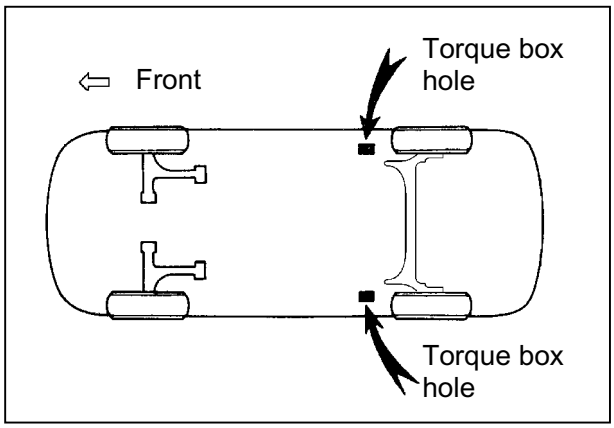

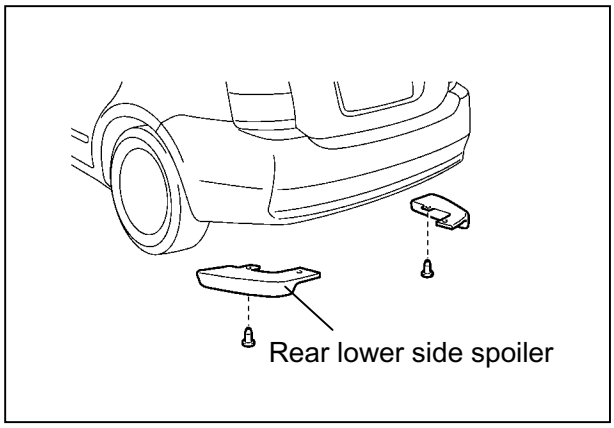

B. ENGINE COMPARTMENT

NOTICE :

- **To protect the paint surface from scratches, protective covers must be used.**
- **Do not touch the orange cable during operations.**
- **After making sure that the hybrid system is off (the "READY" light is off), perform the following inspections.**

HINT : If the oil or fluid is too low, check for leakage and add oil.

Example: PRIUS

Engine compartment overview

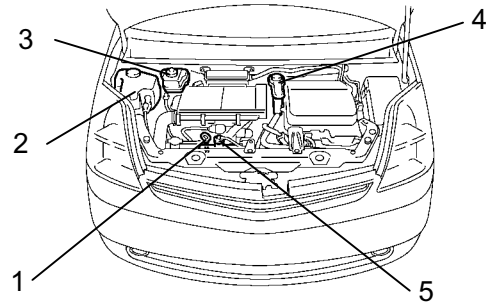

1. Engine oil level dipstick
2. Washer tank
3. Brake fluid reservoir tank
4. Inverter coolant reservoir tank
5. Engine coolant reservoir tank

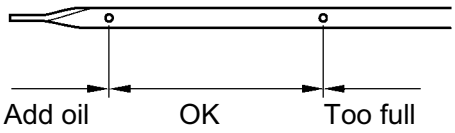

B01. CHECK ENGINE OIL LEVEL

1. After warming up the engine and 5 minutes after stopping the hybrid system (the "READY" light is off), check the engine oil level on the dipstick.
2. Check for dirt or impurities in the oil.

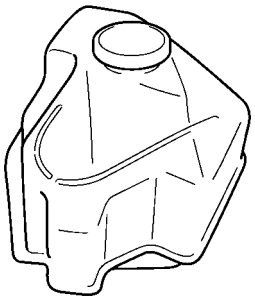

See through type

B02. CHECK WASHER FLUID LEVEL

Check the fluid level of the washer tank.

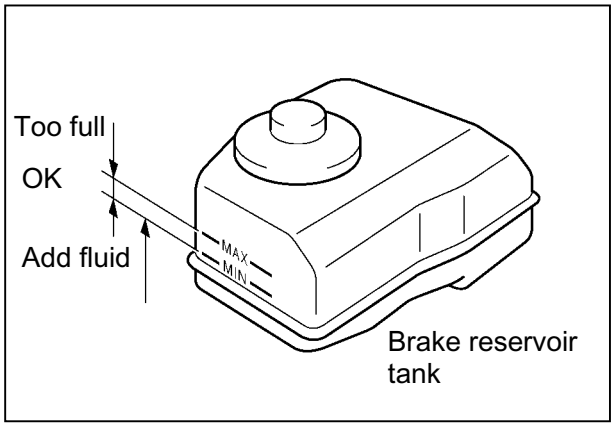

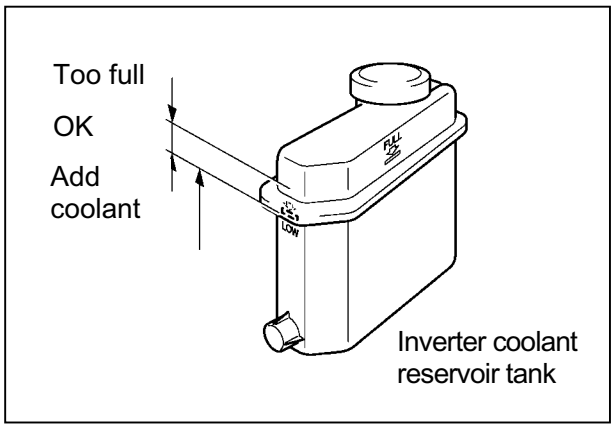

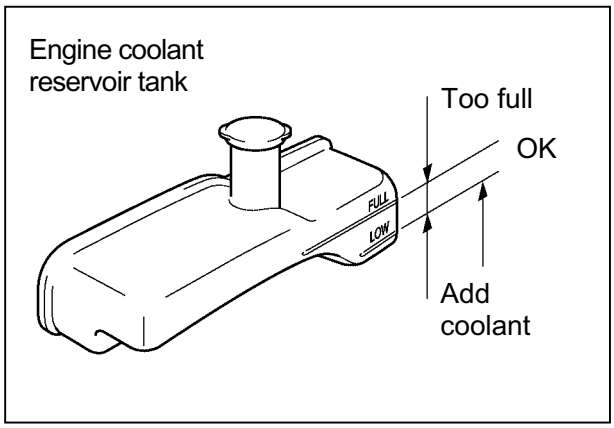

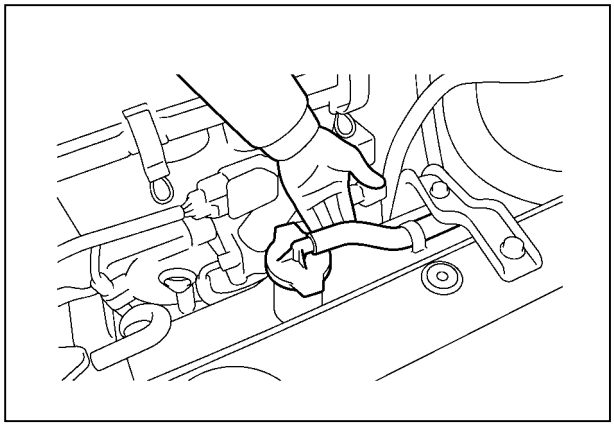

B03. CHECK BRAKE FLUID LEVEL

Visually check the fluid level of the reservoir tank.

1. Stop the hybrid system (the “READY” light is off).
2. Depress the brake pedal more than 40 times.
3. Check that the fluid level is at the “MAX” line. If low, add FMVSS No. 116 DOT 3 or SAE J1703 brake fluid up to the “MAX” line.

B04. CHECK INVERTER COOLANT AND ENGINE COOLANT LEVEL

[Inverter coolant]

HINT :

a. Check the coolant level when the hybrid system is cold.

b. The coolant level in the reservoir will vary with the hybrid system temperature.

1. Check the coolant level of the reservoir tank.
   1) Stop the hybrid system (the “READY” light is off).
   2) Check that the inverter coolant level is between the “FULL” and “LOW”. If low, add only “TOYOTA Super Long Life Coolant” or similar high quality ethylene glycol based non-silicate, non-amine, non-nitrite, and non-borate coolant with long-life hybrid organic acid technology to the “FULL” line.

[Engine coolant]

2. Visually check the coolant level of the reservoir tank. If low, add only “TOYOTA Super Long Life Coolant” or similar high quality ethylene glycol based non-silicate, non-amine, non-nitrite, and non-borate coolant with long-life hybrid organic acid technology to the “FULL” line.

B05. INSPECT FOR FUEL, OIL, COOLANT OR OTHER FLUID LEAKS

1. Visually check each hose and pipe connection for looseness.
2. Look for fuel, oil, coolant or other fluid leaks around the following components :
   (a) Engine
   (b) Brake pipes and hoses
   (c) Radiator and its hoses
   (d) Fuel pipes and hoses
   (e) Coolant heat storage tank and connecting hose (For North American only)

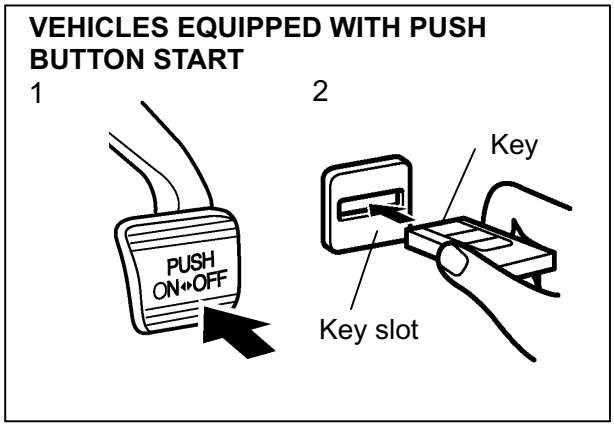

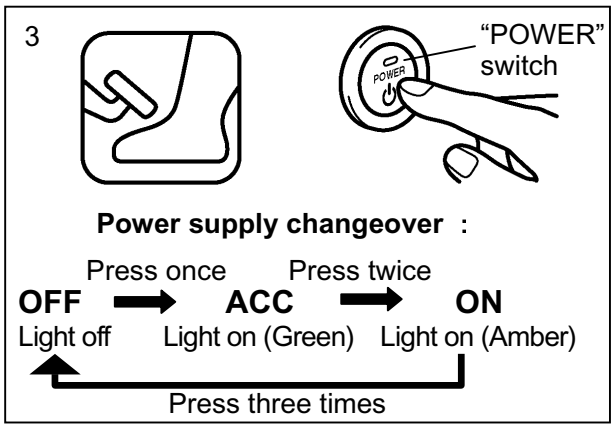

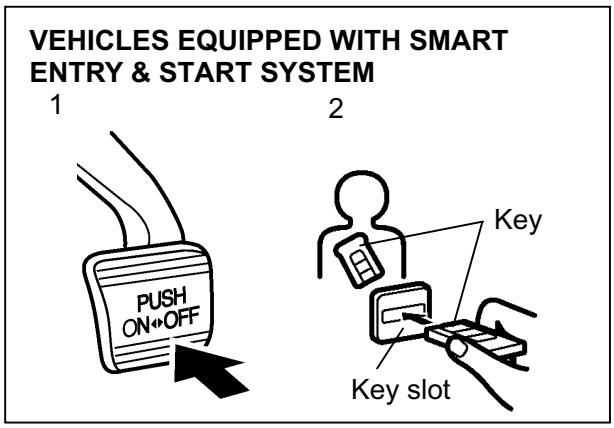

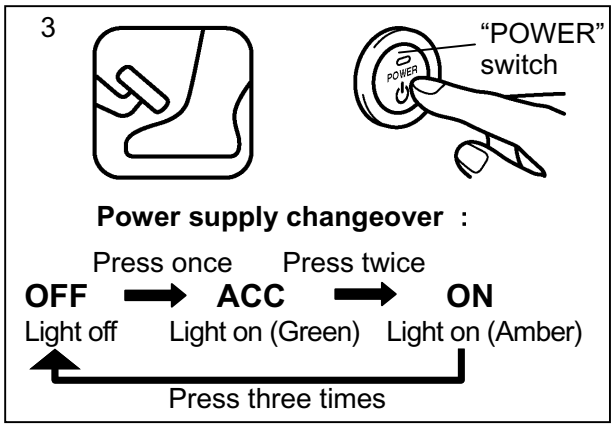

C. INTERIOR AND EXTERIOR INSPECTION

C01. CHECK POWER SUPPLY CHANGEOVER AND IMMOBILIZER SYSTEM

HINT : For details on the startup methods for hybrid systems, refer to the Owner's Manual.

1. Apply the parking brake.

2. Make sure the key is fully inserted into the key slot.

   NOTICE : If the key is inserted into the key slot upside down, it may cause a breakdown.

3. Without depressing the brake pedal, press the "POWER" switch and change the power supply.

   Pressed once: the hybrid system is in the "ACC" position

   Pressed twice: the hybrid system is in the "IG-ON" position

   Pressed three times: the hybrid system is "OFF"

   HINT : If the switch is pressed quickly, the power supply may not change. Make sure to fully press the "POWER" switch.

4. In each mode, check that the power supply has changed properly and that the "POWER" switch indicator has illuminated.

   HINT : If the "POWER" switch indicator blinks in amber, refer to the Repair Manual.

HINT : If the vehicle is equipped with the smart entry & start system, after performing the inspections above, remove the key from the key slot and perform the inspections again, while carrying the key.

C02. CHECK HYBRID SYSTEM START (“READY” LIGHT ON) / STOP (“READY” LIGHT OFF)

HINT :

If the negative terminal of the battery is reconnected, even if the “POWER” switch is pressed once, the hybrid system may not start. At this time, the “READY” light is off. In this case, press the “POWER” switch again to start the hybrid system (the “READY” light is on). If it still does not start (the “READY” light is off), refer to the Repair Manual.

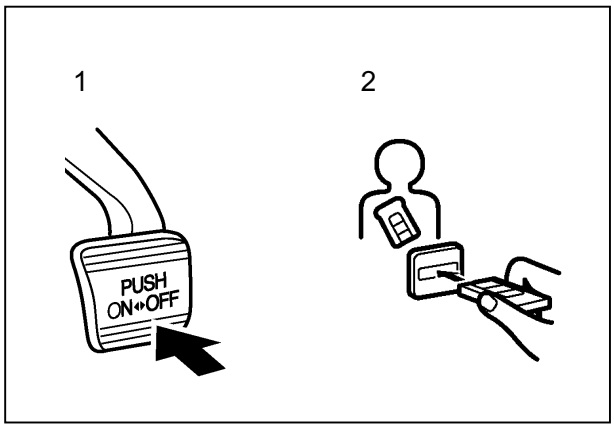

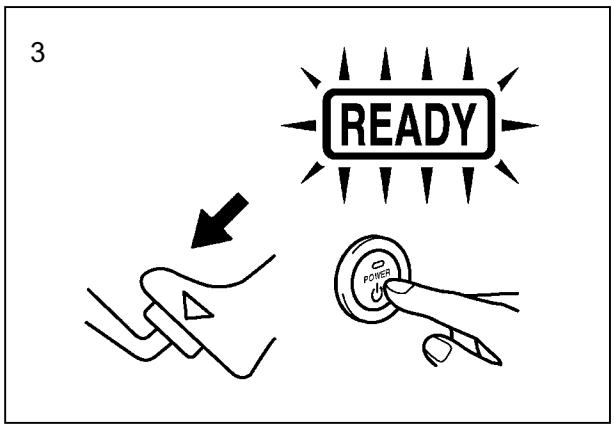

1. Apply the parking brake.
2. Make sure to fully insert the key into the key slot.
3. While depressing the brake pedal, press the “POWER” switch to start the hybrid system (the “READY” light is on). Check that the “READY” light in the meter has illuminated.
4. When the hybrid system has started (the “READY” light is on), check that the “P” position switch light has illuminated and that the frame around the letters of the “P” position indicator has illuminated.

   HINT :

   - When the “READY” light illuminates, it means that the hybrid system has started (the “READY” light is on), and the vehicle is ready to be driven.
   - After the hybrid system has started (the “READY” light is on), if the “P” position switch light blinks in amber, and the frame around the indicator letters does not illuminate, refer to the Repair Manual.
5. To stop the hybrid system (the “READY” light is off), make sure to move the shift lever to the “P” position before pressing the “POWER” switch again. This will cause the hybrid system to stop (the “READY” light is off). Check that all the indicators in the meter have extinguished.

HINT : For vehicles equipped with the smart entry & start system, after performing the inspections above, do not insert the key in the key slot, but carry it and perform inspections 1-5 again.

Hybrid vehicle immobilizer indicator light

C03. CHECK IMMOBILIZER SYSTEM

HINT : For vehicles equipped with the smart entry & start system, after performing the inspections below, do not insert the key in the key slot, but carry it and perform the inspections again.

1. Check that the hybrid vehicle immobilizer indicator light flashes when the key is removed from the key slot.
2. Insert the key half way into the key slot and check that the hybrid vehicle immobilizer indicator light is blinking.
3. Check that the hybrid vehicle immobilizer indicator light goes off with the key fully inserted into the key slot.
4. With the hybrid system off (the “READY” light is off) and the key fully inserted into the key slot, check that the buzzer sounds when the driver’s door is opened with.
5. Check that the hybrid system can be started (the “READY” light is on) using all the keys.

[Vehicles equipped with the smart entry & start system]

6. With the key placed outside the vehicle, check that the hybrid system will not start (the “READY” light is off). Also check that the smart entry system warning light will illuminate for 5 seconds.

C04. CHECK ENGINE OPERATION

(At cold and during warm up)

HINT : Even with the hybrid system started, sometimes the gasoline engine will not start immediately.

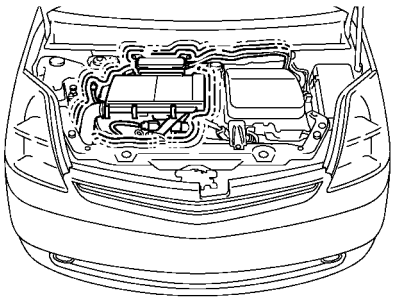

1. While depressing the brake pedal, press the “POWER” switch once to start the hybrid system (the “READY” light is on).
2. Check that the engine operation is smooth.

   Check for:
   (a) Engine startability
   (b) Noise and vibration
   (c) Rough idle

C05. CHECK INDICATORS, WARNINGS AND BUZZERS

HINT: Prius is described below as an example; for further details, refer to the Owner's Manual.

1. Check warning and indicator lights in the meter.

a. SRS warning light

After turning the hybrid system to the “IG-ON” position, check that the SRS warning light illuminates for 6 seconds before it turns off.

b. Low temperature indicator

After turning the hybrid system to the “IG-ON” position, check that the low temperature indicator illuminates for 3 seconds before it turns off. After starting the hybrid system (the “READY” light is on), check that the low temperature indicator turns off when the outside temperature is +3 ˚C (37.4 ˚F) or more. Check that the low temperature indicator illuminates, when the outside temperature is below +3 ˚C (37.4 ˚F).

c. Brake system warning light (red)

After starting the hybrid system (the “READY” light is on) with the parking brake applied, check that the brake warning light (red) illuminates. Check that the brake warning light turns off when the parking brake is released.

HINT : When the hybrid system is started (the “READY” light is on) with the parking brake released, the brake warning light may remain illuminated for 60 seconds. This is normal if the light will turn off afterwards.

d. ABS, VSC, electronic control brake warning light (yellow), engine warning light, slip indicator light

After turning the hybrid system to the “IG-ON” position, check that the warning lights and indicator light above will illuminate. After starting the hybrid system (the “READY” light is on), check that the warning lights and indicator light above will turn off.

HINT : When the hybrid system is started (the “READY” light is on), the ABS, VSC, and brake warning lights may remain illuminated for 60 seconds. This is normal if the lights will turn off afterwards.

e. Open door warning light

Open one of the doors and check that the open door warning light illuminates.

Close the door and check that the open door warning light turns off.

f. Driver's and passenger's seat belt reminder light

After turning the hybrid system to the "IG-ON" position, check that the driver's seat belt reminder light blinks and that it turns off when the seat belt is fastened. While sitting in the passenger seat, turn the hybrid system to the "IG-ON" position, and check that the passenger seat belt reminder light blinks and that it turns off when the seat belt is fastened.

HINT : Perform the check on the passenger side when inspecting the passenger seat.

g. Low fuel level warning light

Low fuel level warning light blinks when the fuel tank becomes nearly empty.

h. Master warning light

Comes on only when there is some malfunction in the system.

HINT : If the master warning light illuminates, refer to the Repair Manual.

Warning Lights and Buzzers			Function
a		SRS warning light	If there is a malfunction in the SRS air bag system or the seat belt system with pretensioner, this light will not illuminate or remain illuminated.
b		Low temperature indicator	This light illuminates when the outside temperature is +3 °C (37.4 °F) or below.
c	BRAKE or	Brake system warning light (red) and buzzer	This light warns that there is a malfunction somewhere in the brake system. If the brake system fails seriously, the warning buzzer also may sound.

(Continued)

Warning Lights and Buzzers			Function
d	ABS or	ABS warning light	This light illuminates when there is a malfunction in the ABS & brake assist system or the VSC system.
	VSC	VSC warning light	・This light illuminates when there is a malfunction in the VSC system and the Motive Force Suppression Control (Motor Traction Control). ・This light illuminates when there is a malfunction in the HV system.
		Electronic control brake warning light (yellow)	・This light illuminates when there is a malfunction in the electronic control brake system. ・The brake system warning light (red) also illuminates when a malfunction affecting braking performance occurs.
		Slip indicator light	・This light blinks when the ABS system, the VSC system or the Motive Force Suppression Control (Motor Traction Control) is operated.
	CHECK	Malfunction indicator lamp	With the hybrid system started (the “READY” light is on), this light illuminates when there is a malfunction in the engine electronic control system or the electronic control throttle system.
e		Open door warning light	This light remains illuminated until all the doors are completely closed.
f	PASSENGER	Driver’s seat belt reminder lights and buzzer Front passenger’s seat belt reminder lights	This light blinks if the driver’s and passenger’s seat belts is/are not fastened.
g	R 1/2 1/1 or E F	Low fuel level indicator light	This light blinks when the fuel tank becomes nearly empty.
h		Master warning light	・This light illuminates if there is a malfunction in any of the following systems: ・Hybrid system ・Electronic shift lener ・Engine oil pressure system ・Engine coolant temperature system ・Auxiliary battery charging system ・Electric power steering system ・Hybrid main battery system ・When the master warning light illuminates, the buzzer sounds and the icon of the system where the malfunction occurred appears on the multi-information display.

2. Check the warning lights in the multi-information display.

When the hybrid system is turned to the “ACC” or “IG-ON” position, or when the hybrid system is started (the “READY” light is on), check that the following warning lights do not appear on the multi-information display.

HINT :

- The following warning lights appear on the multi-information display only when there is a malfunction in the respective system.
- If the following warning lights appear, refer to the Repair Manual.

Warning Lights (in multi-information display)		Function
	Discharge warning light	This light illuminates if there is a malfunction in the charging system (DC/DC converter, auxiliary battery, etc.).
	Low engine oil pressure warning light	This light illuminates if the engine oil pressure is abnormal.
	Coolant temperature indicator light	This light illuminates if the hybrid system is almost over-heating.
P S	Electric power steering system warning light	This light illuminates when the electric power steering control system fails.
	Hybrid system warning light	This light illuminates if there is a malfunction in the electric motor, inverter unit, hybrid vehicle battery, etc.
MAIN	Hybrid vehicle battery warning light	・This light illuminates when the hybrid vehicle battery voltage drops with the running mode selector lever left in the “N” position. The system works properly if you put the running mode selector lever in the “P” position and the light turns off. ・This light illuminates if the fuel tank is completely empty. ・This light illuminates if the hybrid vehicle battery is discharged.
	Automatic headlight leveling system warning light	This light illuminates if there is a malfunction in the automatic headlight leveling system.

3. Check buzzers.

a. Check the key reminder buzzer

With the key inserted into the key slot and the hybrid system turned to the “OFF” or “ACC” position, open the driver’s door and check that the key reminder buzzer sounds.

b. Check the light reminder buzzer

With the headlight switch in the “ON” position and the key removed from the key slot, open the driver’s door and check that the light reminder buzzer sounds.

c. Check the shift position reminder buzzer

While the hybrid system is operating (the “READY” light is on), with the shift lever in a position other than “P” or “R”, open the driver's door and check that the shift position reminder buzzer sounds and the master warning light illuminates. At the same time, check the warning messages on the multi-information display.

d. Check the reverse warning buzzer

While the hybrid system is operating (the “READY” light is on), move the shift lever to the “R” position and check that the reverse warning buzzer sounds.

NOTICE : To prevent the batteries from being discharged, be sure to start the hybrid system (the "READY" light is on) when turning on the electrical control switch.

HINT : Use a mirror or have someone help you when checking the lights.

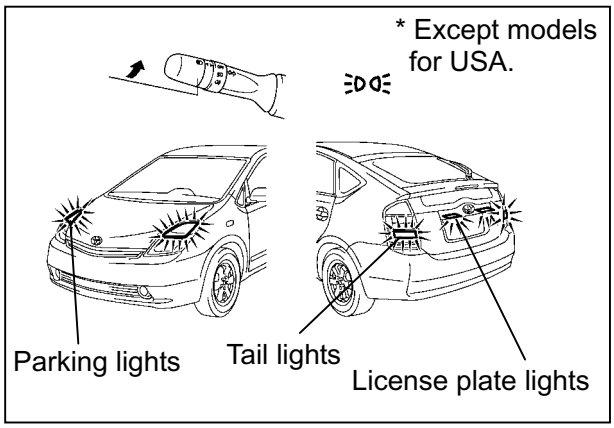

C06. CHECK TAIL AND LICENSE PLATE LIGHTS AND PARKING LIGHTS OPERATION

Turn the headlight switch to the first clickstop, and check that the parking lights, tail lights, license plate lights and the indicators in the meter will illuminate.

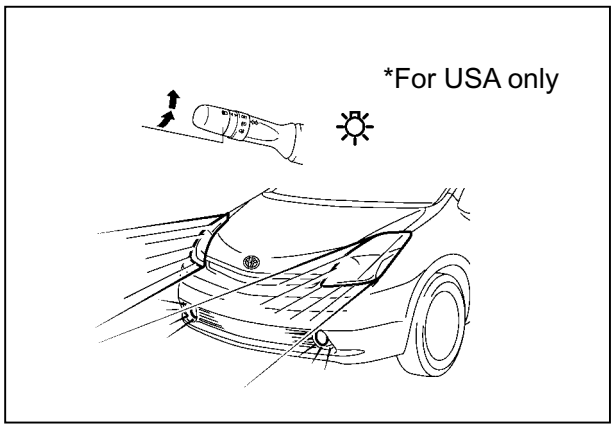

C07. CHECK HEADLIGHTS OPERATION

1. Turn the headlight switch to the second clickstop, and check that the headlights and the indicator in the meter will illuminate.

2. Check the daytime running lights, in which the headlights and tail lights illuminate automatically when the engine is started.

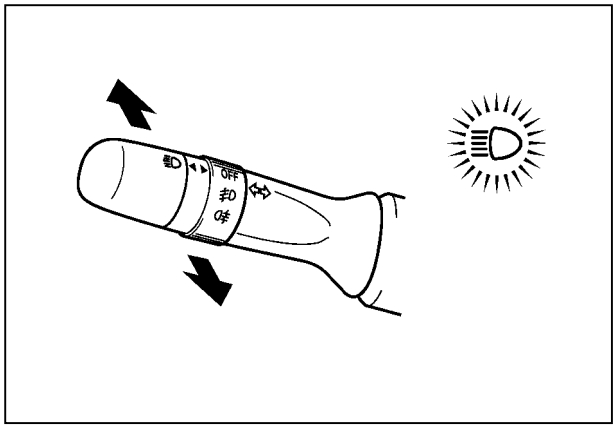

C08. CHECK HIGH-LOW BEAMS/FLASHING HIGH BEAM OPERATION

1. Push the lever forward and check that the high beam and the indicator will illuminate.

2. Pull the lever backward and check that the low beam and the indicator will illuminate.

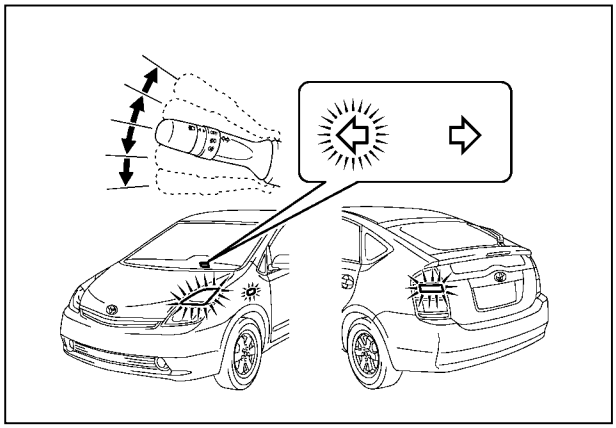

C09. CHECK TURN SIGNALS OPERATION

1. Move the turn signal lever up and down, and check that the front and rear turn signal lights blink.

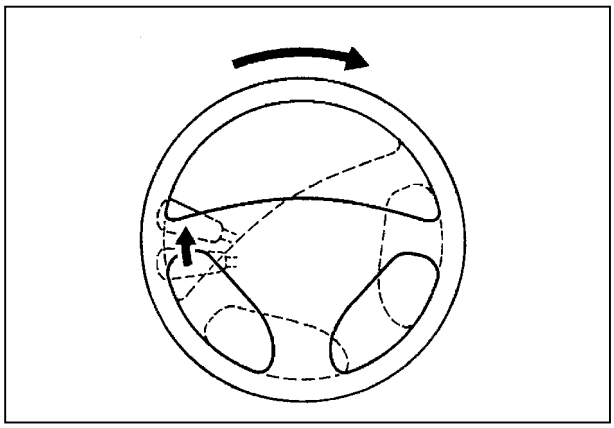

2. Check that the turn signal self-canceling operates properly.

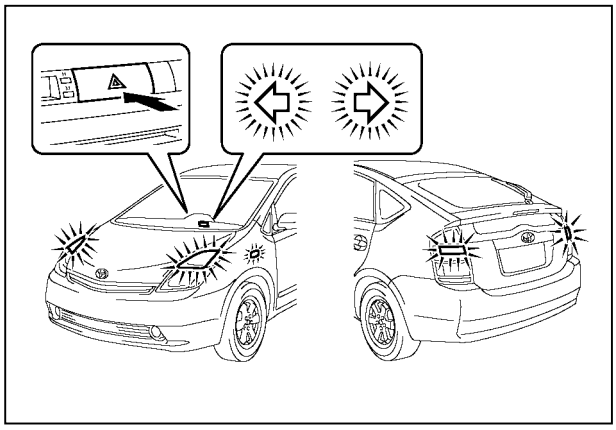

C10. CHECK EMERGENCY FLASHERS OPERATION

Push the emergency switch and check that the front and rear emergency flashers blink.

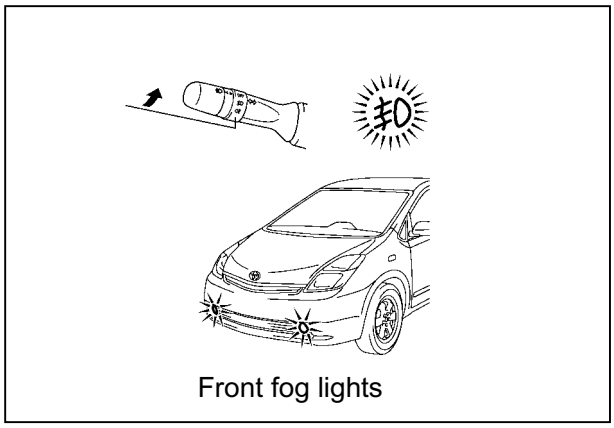

C11. CHECK FRONT FOG LIGHTS OPERATION

With the headlights illuminated, turn the front fog light switch on and check that the front fog lights and the indicator will illuminate.

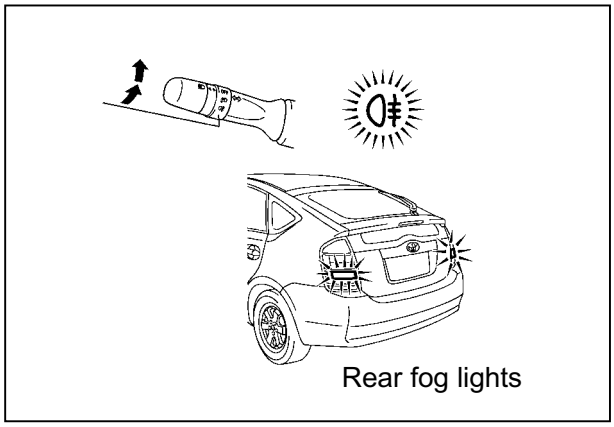

C12. CHECK REAR FOG LIGHTS OPERATION

With the headlights illuminated, turn the rear fog light switch on and check that the rear fog lights and the indicator will illuminate.

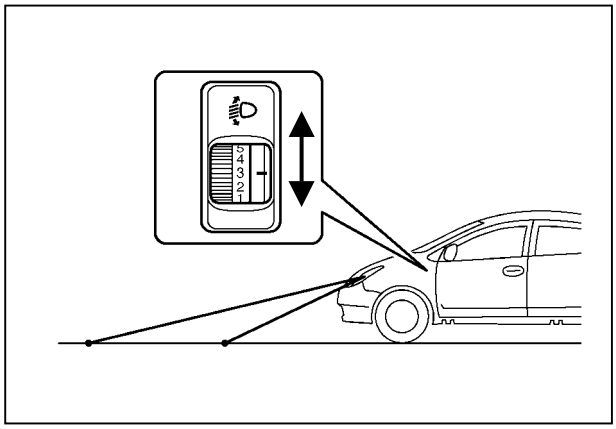

C13. CHECK HEADLIGHT BEAM LEVEL CONTROL SYSTEM OPERATION

With the headlights illuminated, operate the headlight beam level control switch and check that the headlight beam moves up and down.

C14. CHECK HEADLIGHT CLEANER OPERATION

With the headlights illuminated, push the headlight washer switch and check that the headlight washer operates.

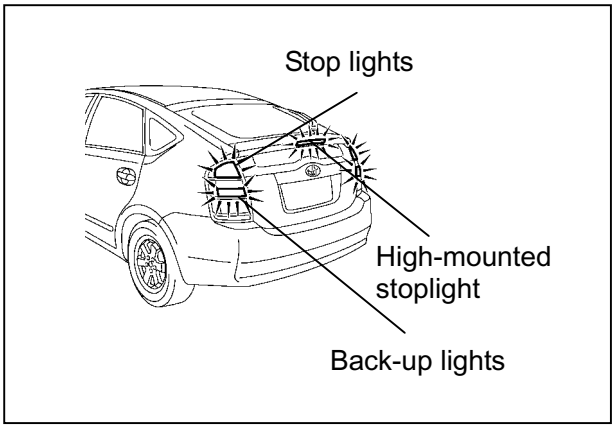

C15. CHECK STOP LIGHTS/HIGH MOUNTED STOP LIGHT OPERATION

Press the brake pedal and check that the stoplights and the high-mounted stop light will illuminate.

C16. CHECK BACK-UP LIGHTS OPERATION

Place the shift lever in reverse and check that the back-up lights illuminate.

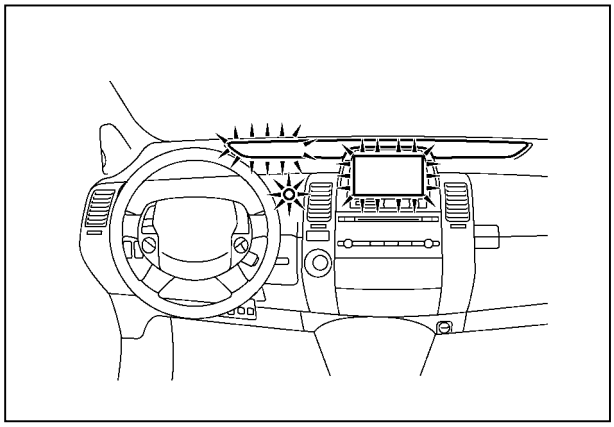

C17. CHECK INSTRUMENT PANEL LIGHTS OPERATION

Turn on the headlights and check that the instrument panel lights (combination meter, heater, radio, etc.) illuminate.

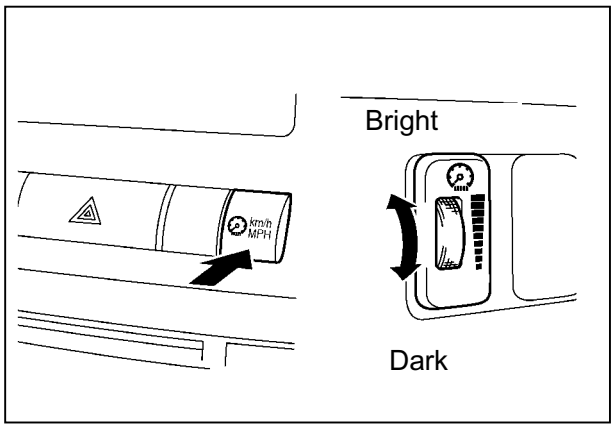

C18. CHECK DIMMER OPERATION

Turn the parking lights or the headlights on, and check that the brightness of the meter can be adjusted with the dimmer switch.

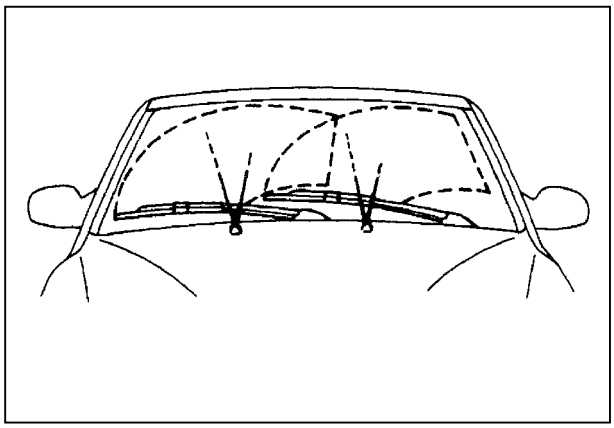

C19. CHECK WIPERS AND WASHERS (FRONT AND REAR) OPERATION

1. Check that the washer fluid squirts onto the proper area of the windshield (and rear window).

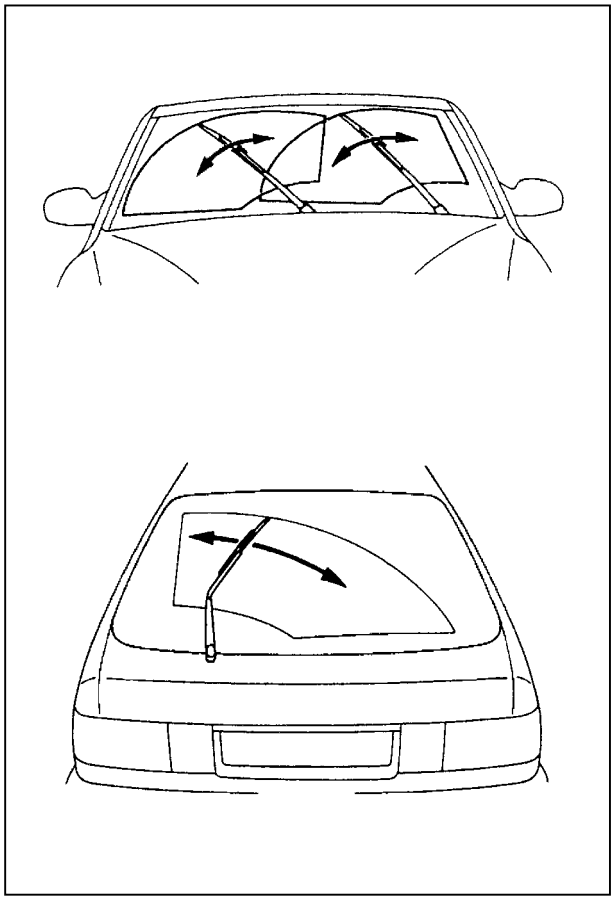

2. Check the operation of the wipers (intermittent, low speed, high speed, auto and mist operation).

3. Check that the wiper blades wipe off cleanly.

4. The wipers should not make any abnormal noise when operating.

5. The wiper arm should not contact the windshield (rear window) outside moulding.

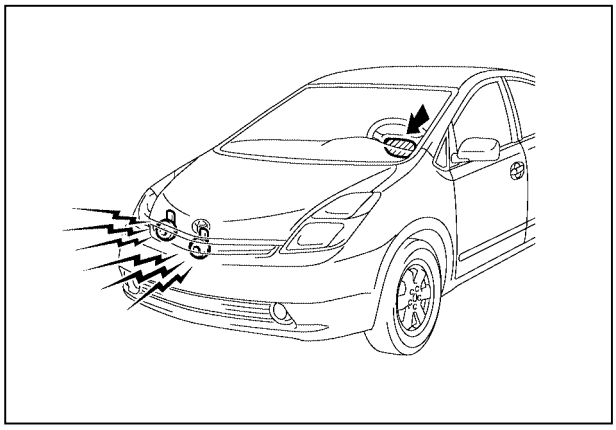

C20. CHECK HORN SOUND OPERATION

Press the horn pad and check that the horn sounds properly.

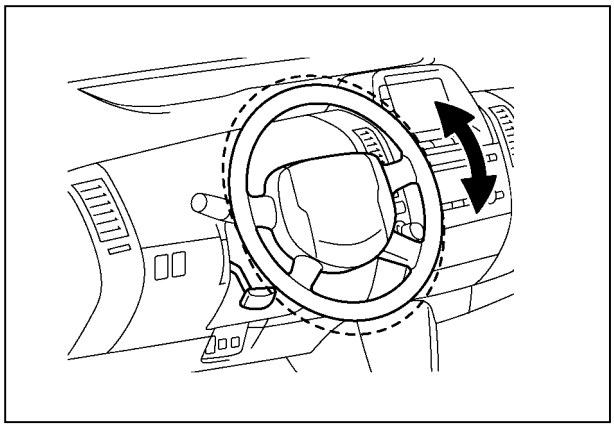

C21. CHECK TILT AND TELESCOPIC STEERING WHEEL OPERATION AND STEERING LOCK OPERATION

1. Check that the tilt steering wheel can be adjusted smoothly and locks securely in each position.

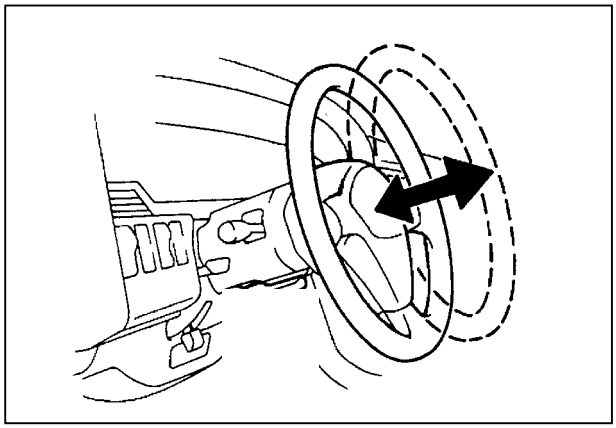

2. Check that the telescopic steering wheel can be adjusted smoothly and locks securely in each position.
3. With the hybrid system “OFF” (the key not inserted in the key slot), check that the wheel locks when it is rotated either to the right or left.

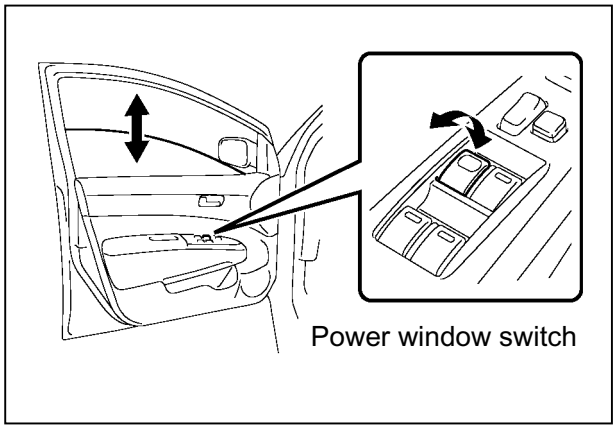

C22. CHECK POWER WINDOW OPERATION

HINT : For the power window initializing procedure, refer to the Service Bulletin.

1. Check that the door windows open and close smoothly using the power window switches on each door.

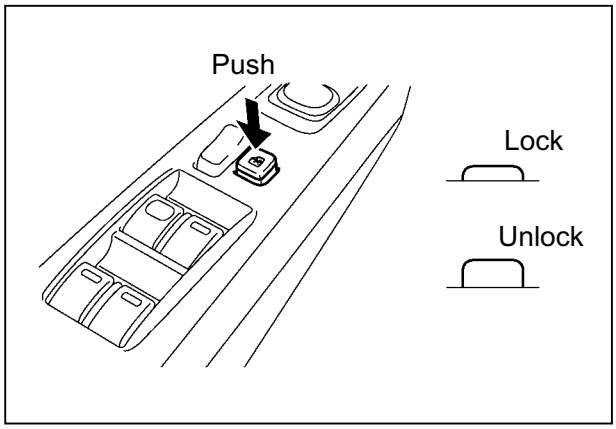

[Automatic operation]

2. Check for proper operation of the “one-touch open and close” function by fully pushing the switch down once and fully pulling the switch up once.
3. Check that the windows (other than the driver’s window) cannot be operated after the window lock switch is open.

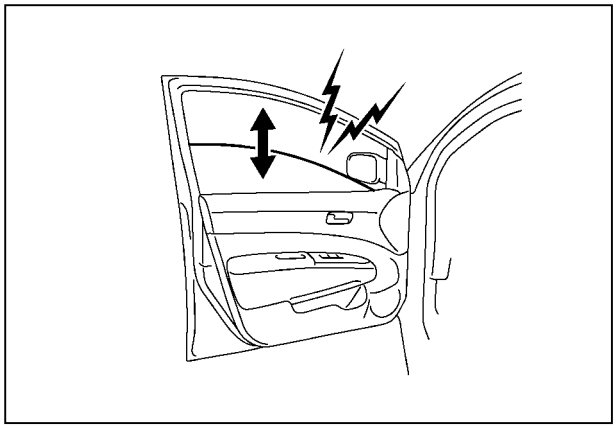

4. All windows should operate without any abnormal noise.

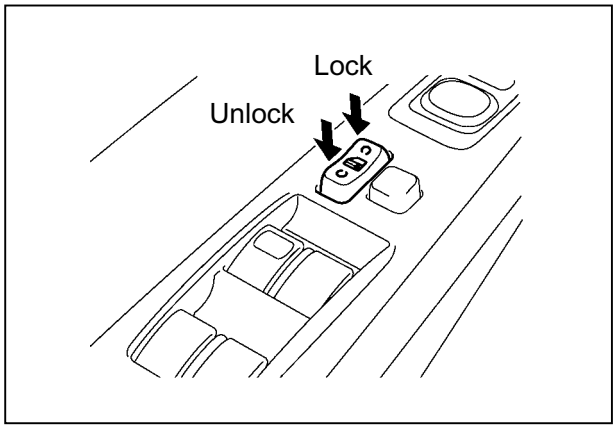

C23. CHECK OPERATION OF POWER DOOR LOCK SWITCH

Check that all doors are locked and unlocked with the power door lock switch.

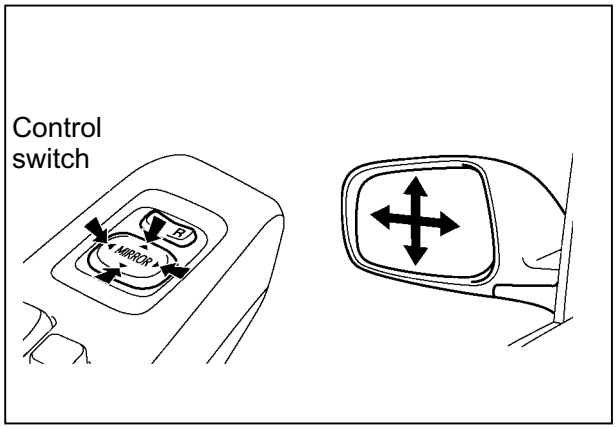

C24. CHECK OPERATION OF OUTSIDE MIRRORS

1. Operate the outside mirror control switch and check that the rearview mirror can be smoothly adjusted.

2. The outside rearview mirror should not make any abnormal noise when operating.

3. Push the mirror retraction button and check that the outer mirrors will retract.

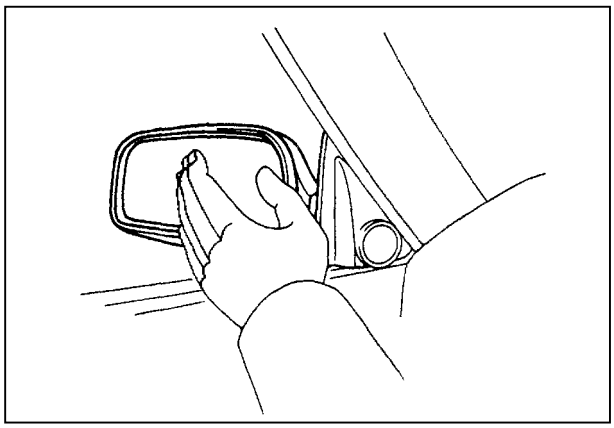

4. Check the operation of the mirror heater.

   HINT : Touch the mirror surface and check that the mirror becomes warm when the rear window defogger switch is turned on.

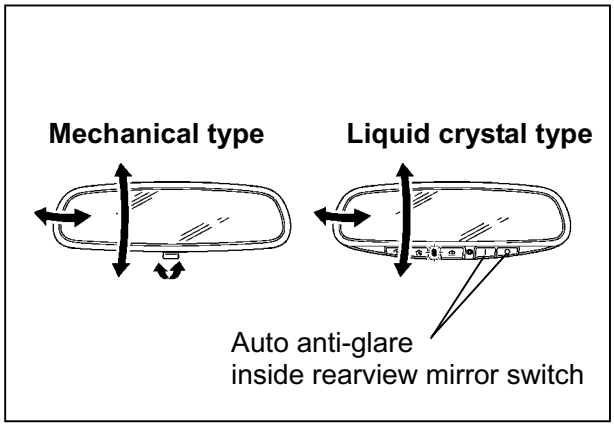

C25. CHECK OPERATION OF INSIDE MIRROR

1. Check that the inside rearview mirror can be adjusted smoothly.
2. Check the operation of the day-night change lever of the inside rearview mirror.
3. Check the auto anti-glare of the inside rearview mirror. With the hybrid system in the “IG-ON” position, check that the LED (green) illuminates when the “|” switch on the auto anti-glare inside rearview mirror is pushed, and that the LED (green) goes off when the “O” switch is pushed.

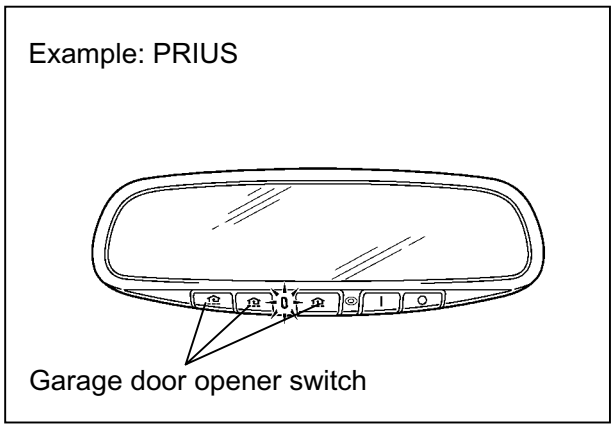

C26. CHECK OPERATION OF GARAGE DOOR OPENER

HINT : For registration, refer to the Owner's Manual.

Check that the LED (red) illuminates when the garage door opener switch is pushed.

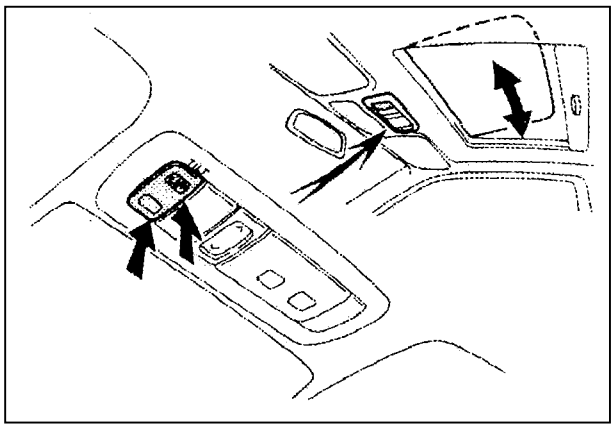

C27. CHECK SUNROOF OR MOON ROOF OPERATION

HINT : For the initializing methods, refer to the Service Bulletin.

1. Operate the tilt and slide buttons and check that the moon roof tilts and slides smoothly.
2. When the moon roof is operating, check that there is no abnormal noise.

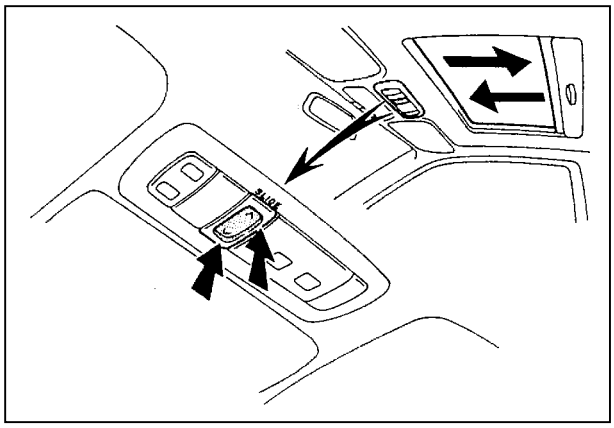

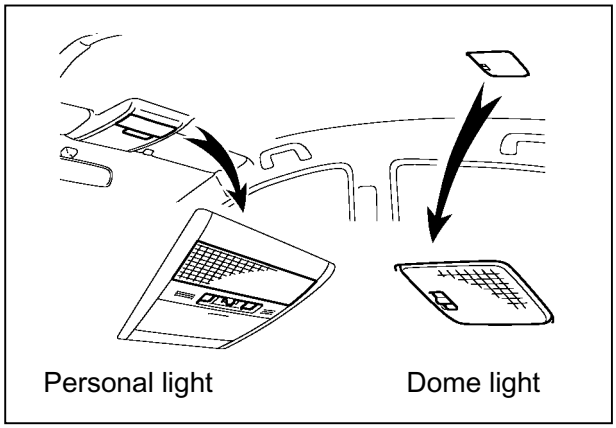

C28. CHECK INTERIOR LIGHTS OPERATION

Check the operation of the following interior lights:

(a) Dome light

(b) Personal light

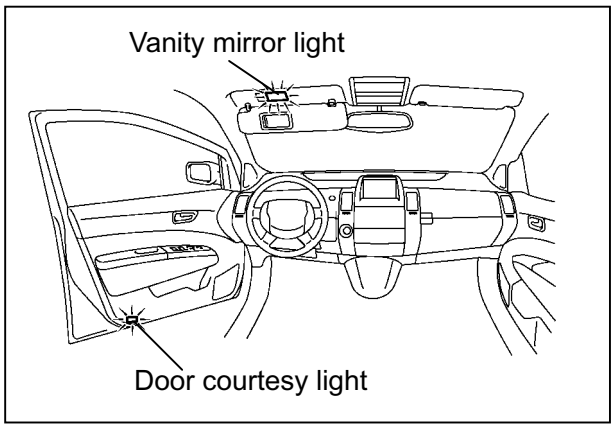

(c) Vanity mirror lights

(d) Door courtesy lights

(e) Other lights

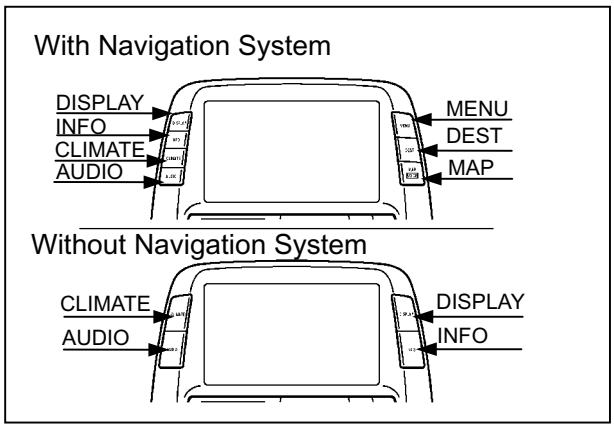

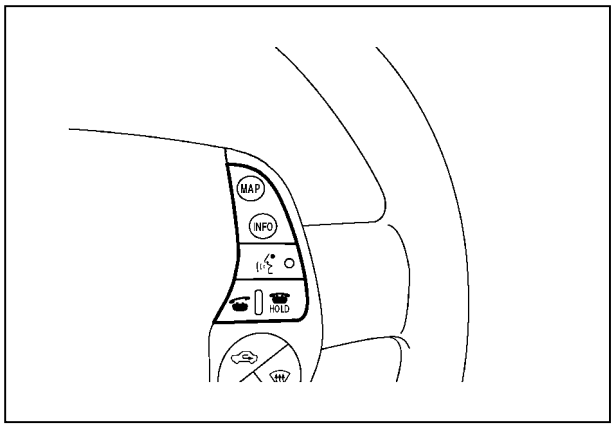

C29. CHECK MULTI-INFORMATION DISPLAY/NAVIGATION SYSTEM

HINT : For details, refer to the Owner's Manual.

1. Set the hybrid system to the “ACC” or “IG-ON” position and check that the initial “TOYOTA” screen appears for a few seconds and then changes to the “MAP”, “ENERGY MONITOR”, “FUEL CONSUMPTION” screen or “SCREEN OFF” (dark screen) depending on the previous display.

2. Push the “MAP”, “DEST”, “MENU”, “INFO”, ”DISPLAY”, “CLIMATE” or “AUDIO” button and check that the display changes according to the pressed button.

   HINT : On vehicles without the Navigation System, the “MAP”, “DEST” and “MENU” buttons do not work even if pushed.

3. Operate the steering pad switches and check that the “MAP”, “INFO”, “TELEPHONE” and “SPEECH COMMAND SYSTEM” can be controlled.

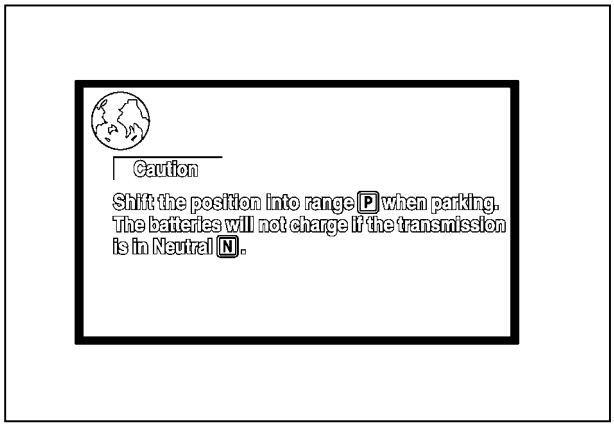

C30. CHECK WARNING MESSAGE

Start the hybrid system (the “READY” light is on) and move the shift lever into the “N”, “D”, or “B” position. Open the door and check that the buzzer sounds at the same time the warning message appears.

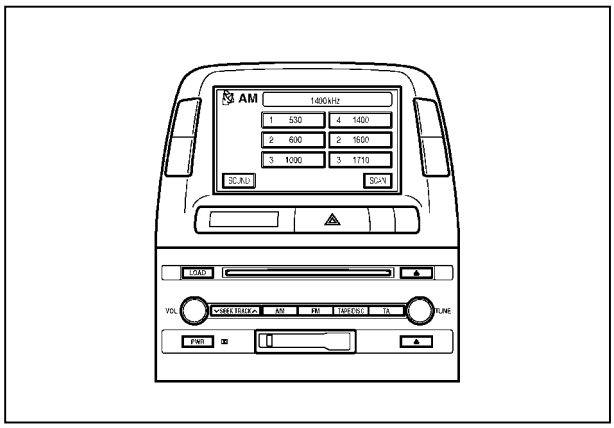

C31. CHECK AUDIO SYSTEM OPERATION

HINT : For details, refer to the Owner’s Manual.

1. Push the power volume switch on and check that it operates smoothly.
2. Pre-set the station selector buttons to the local broadcast frequencies.
3. Check the cassette and compact disc player operation.

Example: PRIUS

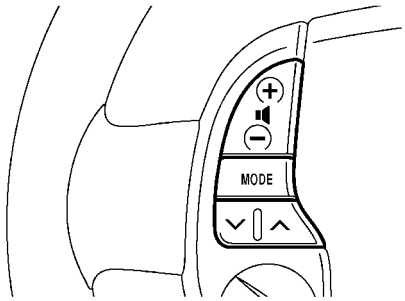

4. Operate the steering pad switches and check that the audio system can be controlled.

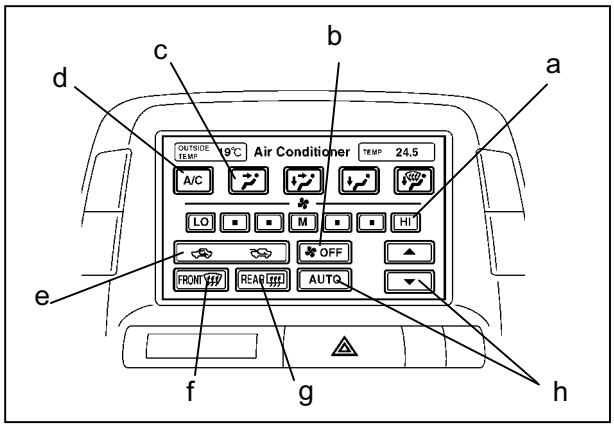

C32. CHECK FRONT HEATER AND A/C OPERATION

1. Check the control operation and indicator display of the switches below.

[Control operation]
(a) Fan speed control
(b) OFF switch
(c) Air flow mode control
(d) A/C switch

[Control operation and indicator display]
(e) Air inlet control
(f) Front defroster
(g) Rear defogger
(h) Temperature and automatic control

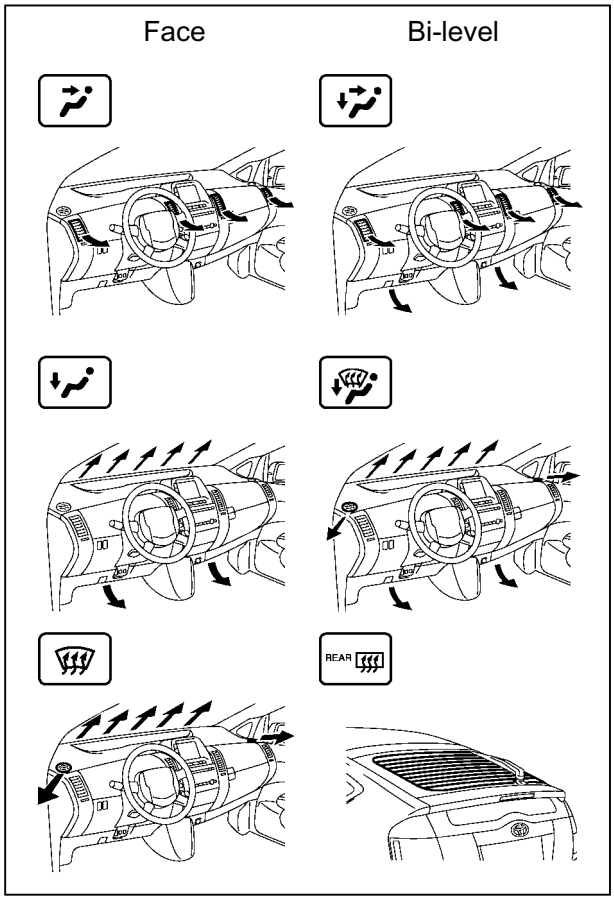

2. Check that the air flow changes in accordance with the air flow mode control level or switch.

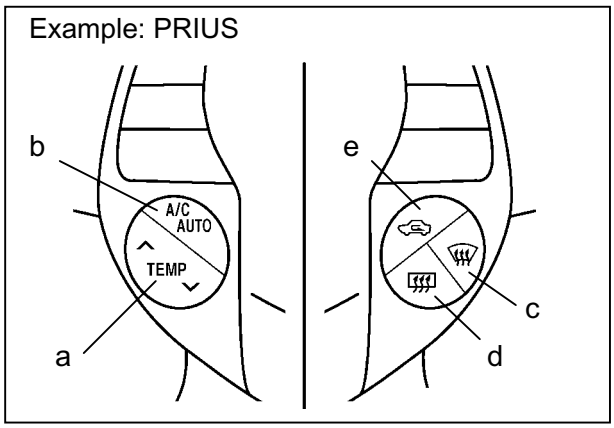

3. Operate the steering pad switches and check that the following contols operate properly and that the respective indicator illuminates:

(a) Temperature control

(b) Automatic control

(c) Front defroster

(d) Rear defogger

(e) Air inlet control

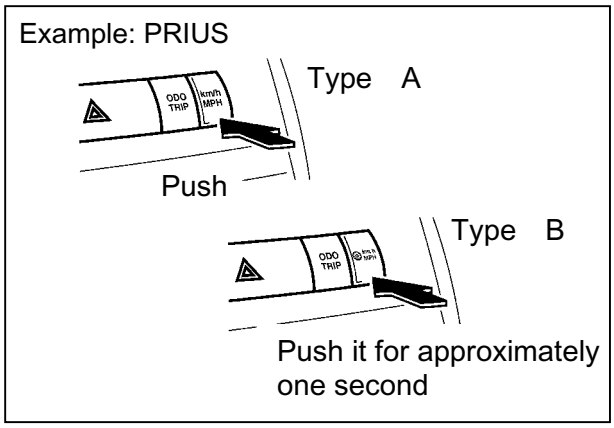

C33. CHECK KM/H / MPH DISPLAY CHANGEOVER

Push the “km/h / MPH” button and check that the display changes between km/h and mph.

HINT :

Type A: Push

Type B: Push it for approximately one second.

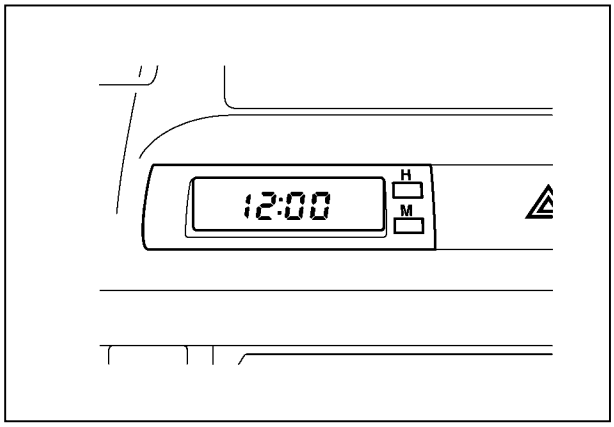

C34. CHECK CLOCK OPERATION

Check that the clock operates and set it to the correct time.

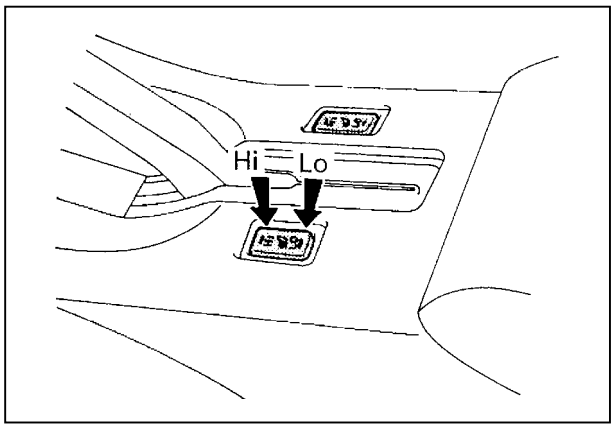

C35. CHECK SEAT HEATER OPERATION

Operate the seat heater switch and check that the seat heater operates.

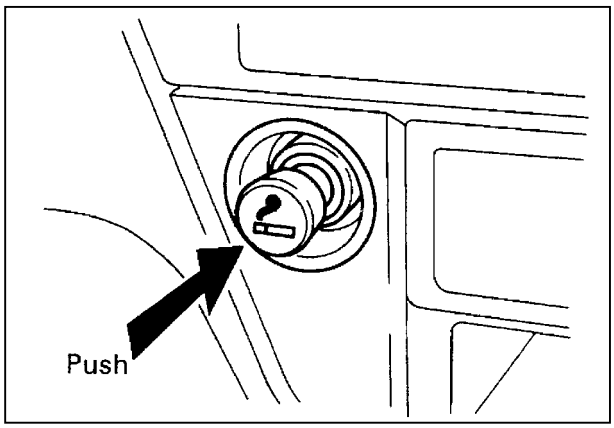

C36. CHECK CIGARETTE LIGHTER OPERATION

Push in the cigarette lighter and check that the coil is bright red when the lighter automatically pops out.

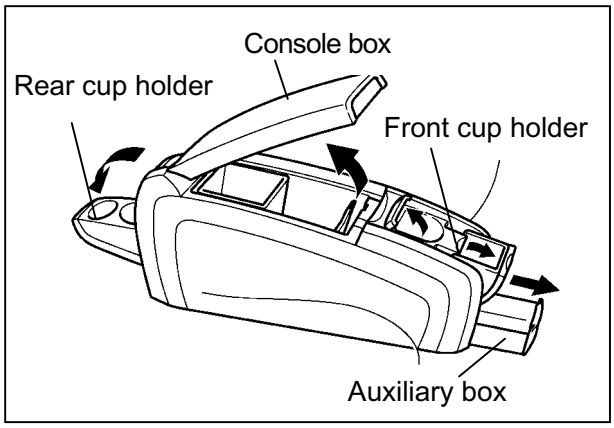

C37. CHECK GLOVE BOX DOORS, CONSOLE BOX DOOR, CUP HOLDER, AUXILIARY BOXES OPERATION

1. Check that the console box door and cup holders open and close smoothly.

2. Check that the glove box door and console box door open and close smoothly.

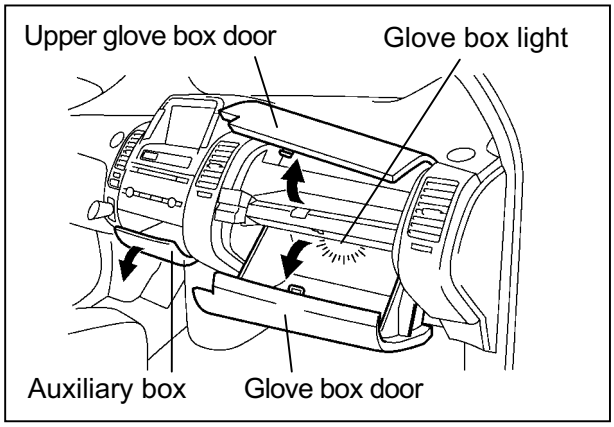

3. Check that the glove box light illuminates when the glove box is opened.

HINT : The glove box light illuminates when the headlights or parking lights are turned on.

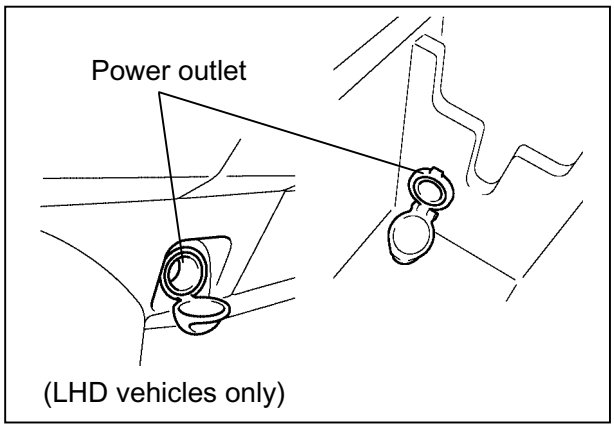

C38. CHECK POWER OUTLET OPERATION

With the hybrid system in the “ACC” or “IG-ON” position, check the power outlet on the inner panel and in the console box using an electrical accessory designed for this use.

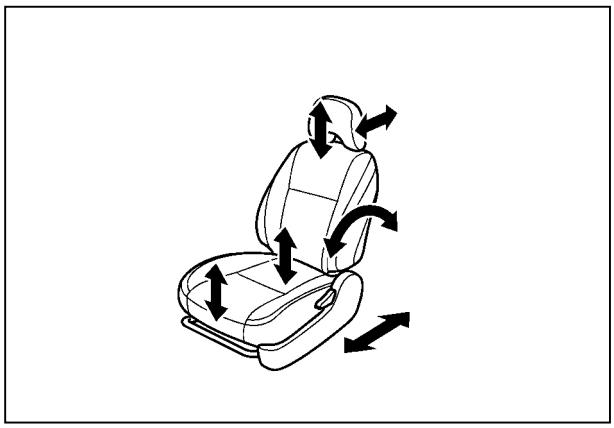

C39. CHECK DRIVER’S SEAT AND DRIVER’S SEAT BELT OPERATION

1. Check that the seat slides smoothly, reclines properly, folds or removes properly and locks securely in any position.

   (a) Seat slide adjustment

   (b) Seat reclining adjustment

   (c) Seat vertical adjustment

   (d) Lumbar support adjustment

   (e) Headrest adjustment

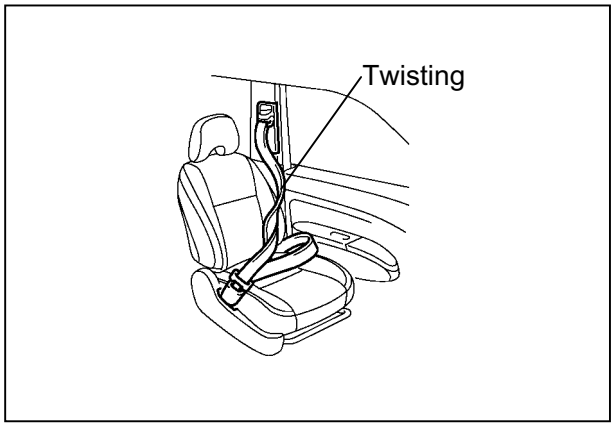

2. Visually check the seat belt appearance and check for smooth operation.

   (a) Twisting, dirt and damage

   (b) Smooth extension and retraction

   (c) Secure locking and smooth release

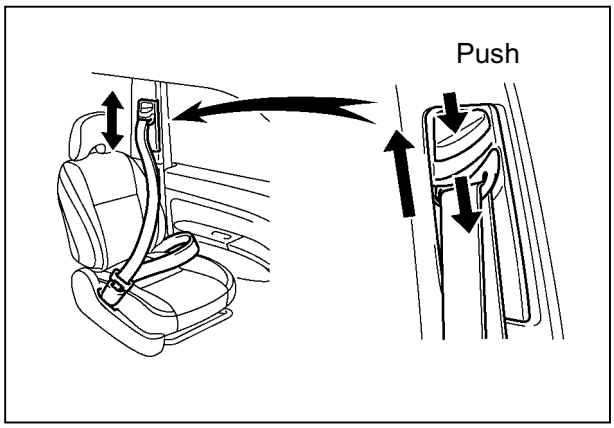

3. Check that the adjustable shoulder belt anchor moves smoothly and locks securely.

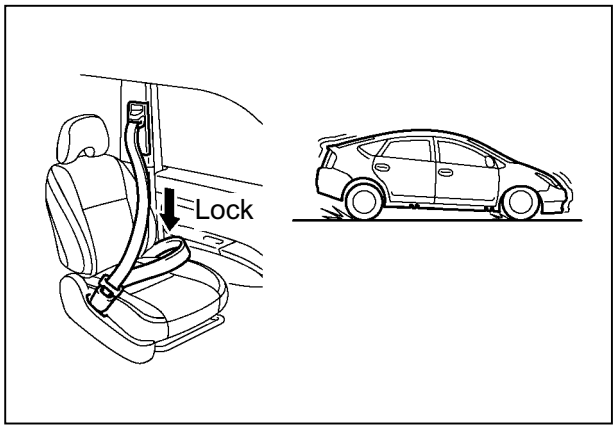

4. Check that the belt locks during sudden braking.

   HINT : Perform this check during the road test.

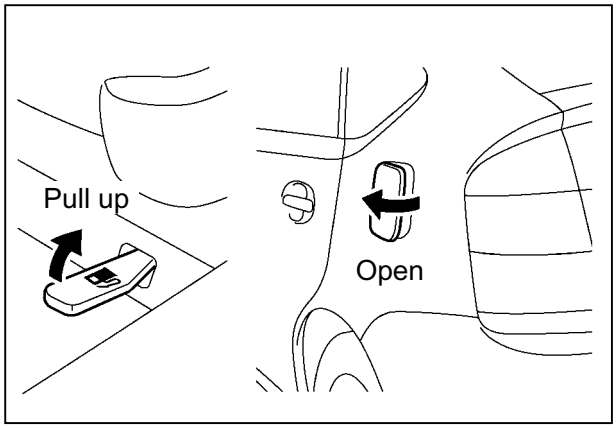

C40. CHECK OPERATION OF FUEL FILLER DOOR AND HOOD LOCK RELEASE LEVER

1. Pull the opener and check that the fuel filler door opens smoothly.

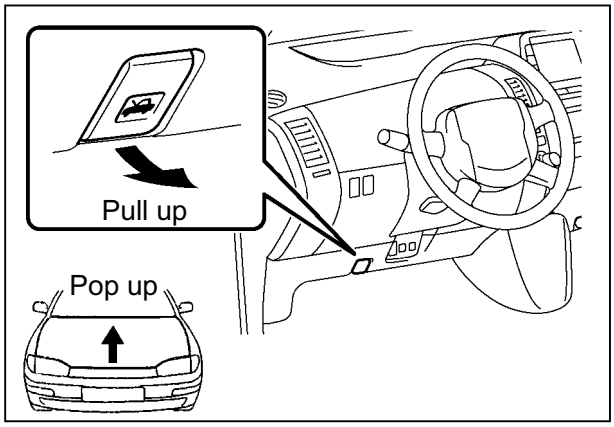

2. Pull the release lever and check that the hood pops up smoothly.

3. Check that the hood safety catch prevents the hood from being pulled.

4. Push the edge of the front hood closed by hand and check that the hood locks securely.

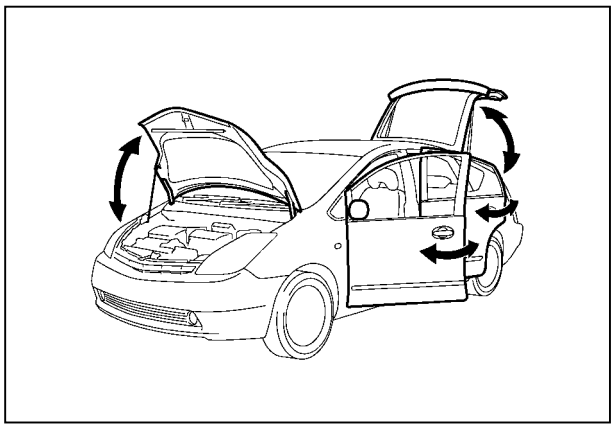

C41. CHECK OPERATION OF DOORS AND DOOR LOCKS

[Door operation]

1. Check that all doors open and close smoothly.

   (a) Front and rear doors

   (b) Back door / Trunk lid

   (c) Hood

   HINT : Leave all windows open and keep the key outside the vehicle when checking the door lock system.

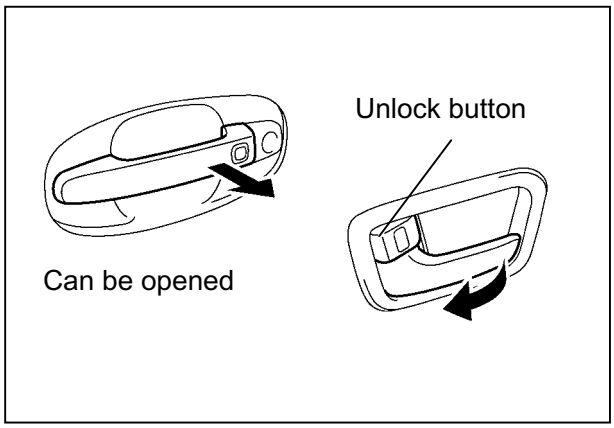

[Manual door lock operation]

2. With the inner lock button in the unlocked position, operate both the outside and inside handles and check that all doors open and close smoothly.

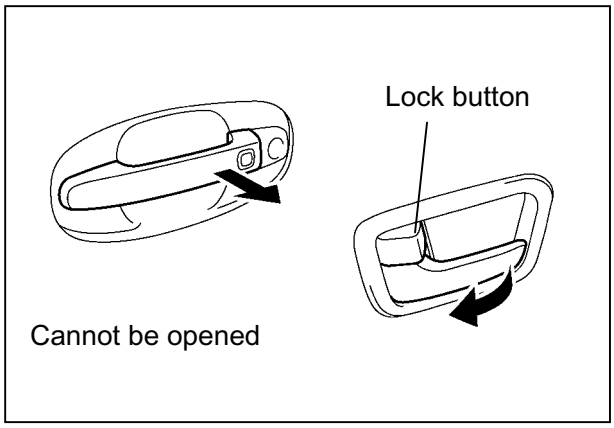

3. With the inner lock button in the locked position, check that the doors cannot be opened.

   HINT : On a vehicle equipped with the smart entry & start system, prevent the system from operating by keeping the key a minimum of 5 meter away from the vehicle while performing this check.

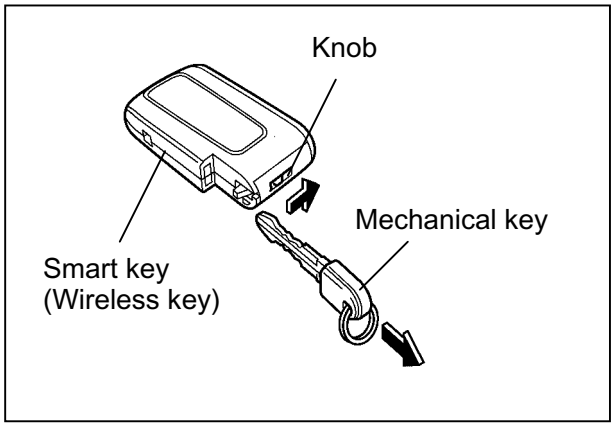

HINT : How to remove the mechanical key

a. Keep pushing the key knob in the direction of the arrow to release the lock and remove the mechanical key.

b. To store the key, keep pushing the key knob in the direction of the arrow to release the lock, and insert the mechanical key until it locks securely.

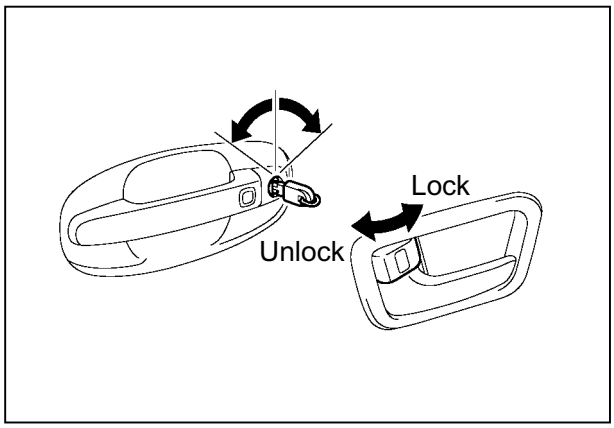

4. Check that the front doors lock and unlock with the mechanical key.

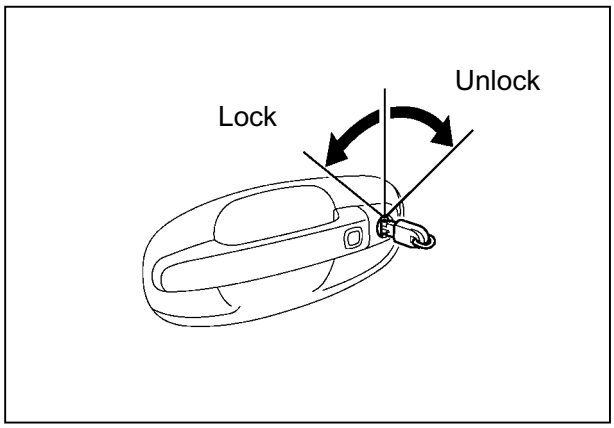

5. Check that the power door lock control system operates properly.

a. Check the door lock and unlock with the mechanical key.

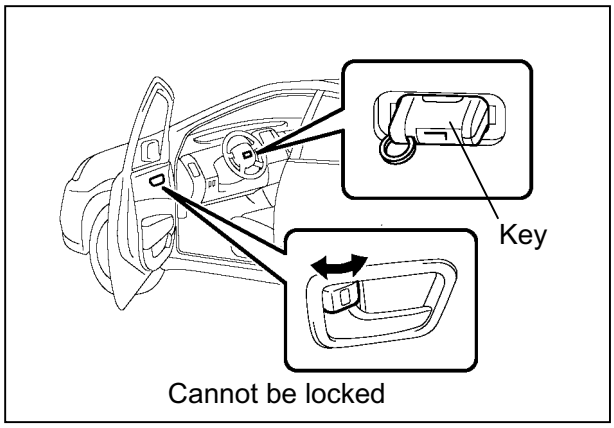

b. Key confinement prevention mechanism operation

- With the key inserted in the key slot, open the driver's door and check that the door lock does not operate.
- With the hybrid system "OFF" (the "READY" light is off) or in the "ACC" position, open the driver's door and check that the warning buzzer sounds.

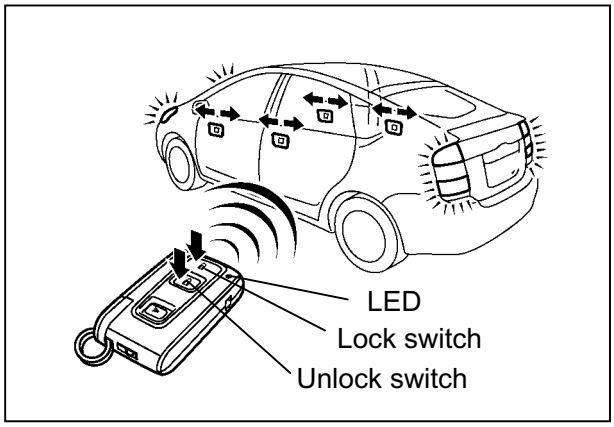

C42. CHECK OPERATION OF WIRELESS DOOR LOCK REMOTE CONTROL SYSTEM

1. Press the LOCK switch on the key and check that all the doors lock. Check that the hazard lights and the LED on the key blink once, when the switch is pressed.

2. Press the UNLOCK switch on the key* and check that all the doors unlock. Check that the hazard lights and the LED on the key blink twice, when the switch is pressed.

   * North American specification only

   Press the switch once to unlock the driver's door. Press it twice to unlock all the doors.

3. After checking the UNLOCK function, wait for approximately 30 seconds without opening the doors, and check that the doors lock automatically.

4. Push the LOCK switch on the key while one of the doors is open, and check that the buzzer sounds.

   [For Europe (RHD vehicles): double lock function]

1. After stopping the hybrid system (the “READY” light is off), remove the key from the key slot.

2. Get out of the vehicle and close all the doors.

3. Press the LOCK switch on the key twice within 5 seconds to lock the doors.

4. Check that the vehicle’s door lock knob returns to the lock position even when you try to release it.

5. Push the UNLOCK switch on the key and check that the double lock function has been canceled.

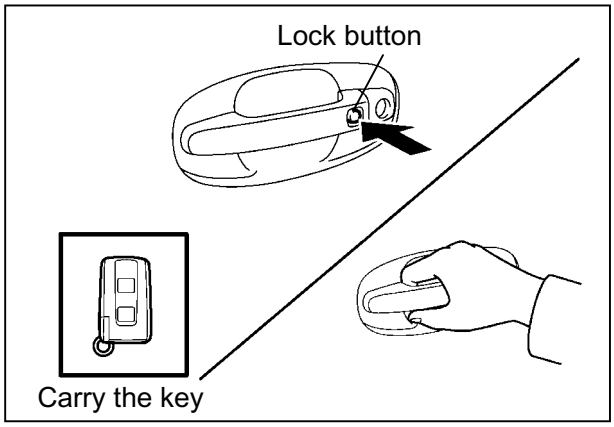

C43. CHECK OPERATION OF SMART ENTRY & START SYSTEM

HINT : Perform the following inspections only on a vehicle equipped with the smart entry system.

1. With the smart key placed within the vehicle, push the lock button on the outside handle and check that the buzzer sounds and that the door does not lock.
2. Take the smart key and get out of the vehicle. Push the lock button on the outside handle and check that the door locks.
3. From a distance of at least 1 meter, approach the vehicle and pull the outside handle of left and right sides and the back door opener. Check that the door unlocks.

   HINT : The doors cannot be unlocked for 3 seconds after the doors are locked.
4. Check that the back door is unlocked by pushing the back door opener.

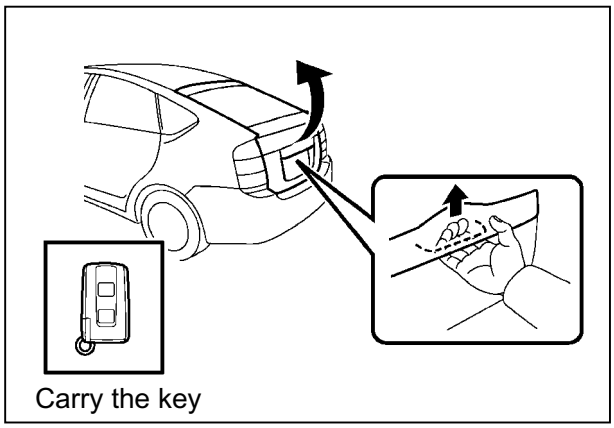

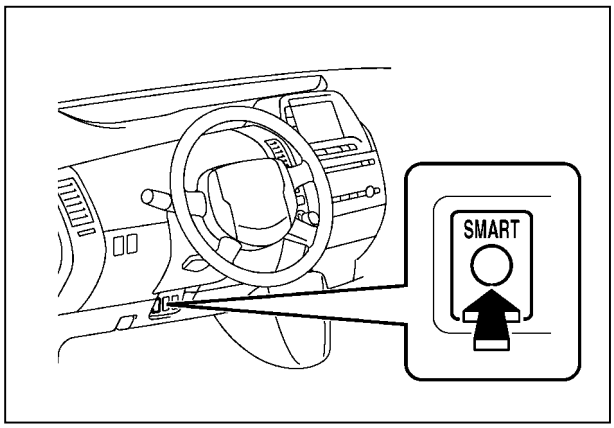

5. Push the smart cancel switch and check that the smart entry function does not operate.

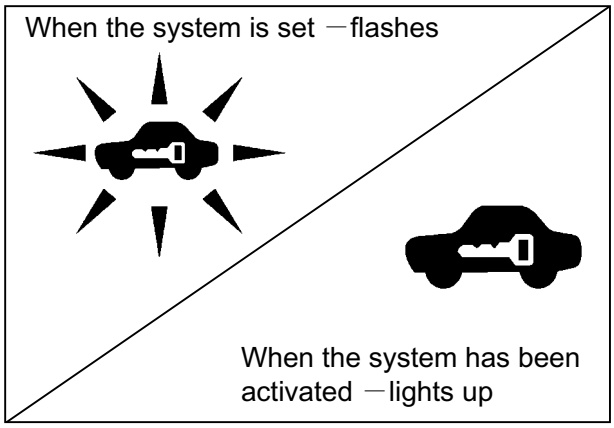

C44. CHECK OPERATION OF THEFT DETERRENT SYSTEM

1. With all the doors and the hood closed, use the wireless key to lock all of the doors.
2. Check that the theft deterrent system indicator light in the meter illuminates for 30 seconds after the doors are locked, and blinks afterwards.

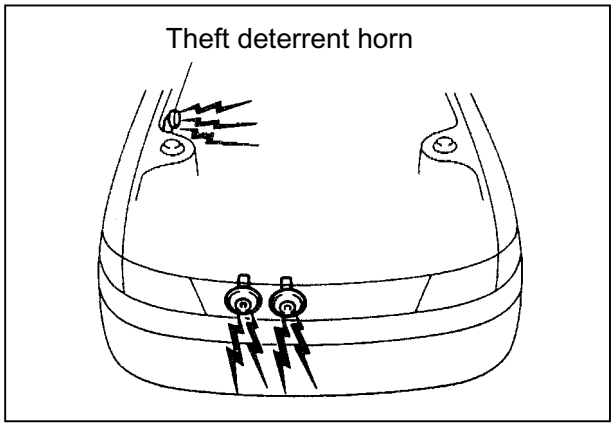

3. Turn the door lock button in the vehicle to the unlock position, and check that the headlights blink and the horn sounds.

4. Cancel the security system by unlocking it with the wireless key.

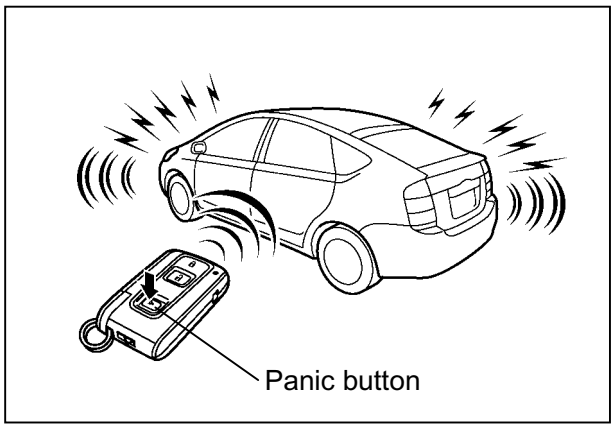

5. Check that the horn sounds when the panic button is pushed.*

   *: North American specification only

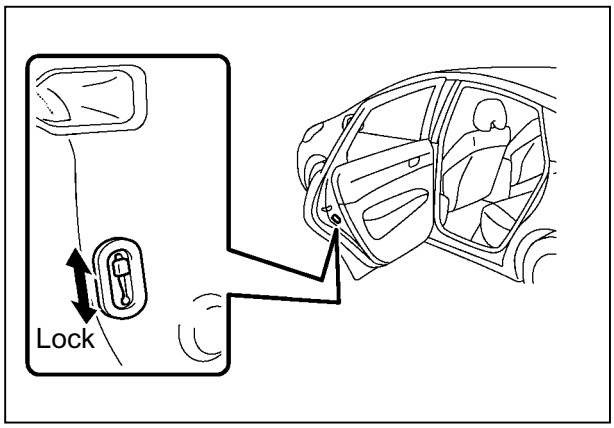

C45. CHECK CHILD PROTECTOR OPERATION

With the child-protector in the lock position, check that the rear door cannot be opened by the inside handle and can be opened by the outside handle.

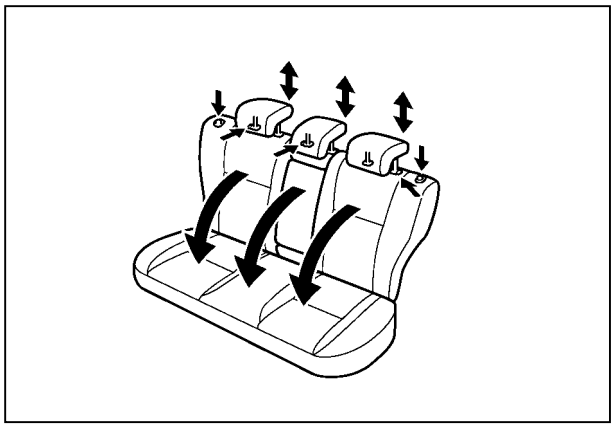

C46. CHECK REAR SEATS AND REAR SEAT BELT OPERATION

1. Check that the seat slides smoothly, reclines properly, folds or removes properly and locks securely in any position.

   (a) Headrest adjustment

   (b) Folds or removes

   (c) Arm rest

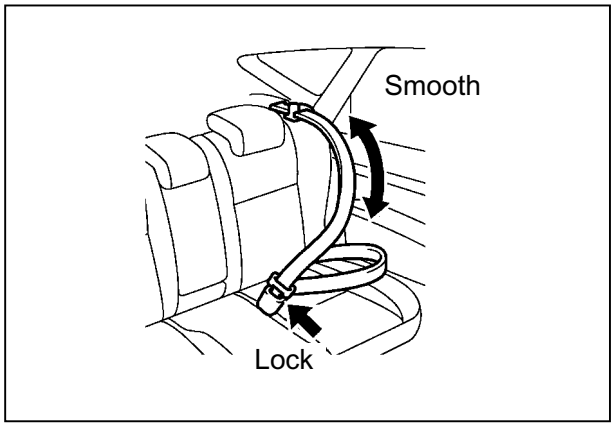

2. Visually check the seat belt appearance and check for smooth operation.

   (d) Twisting, dirt and damage

   (e) Smooth extension and retraction

   (f) Secure locking and smooth release

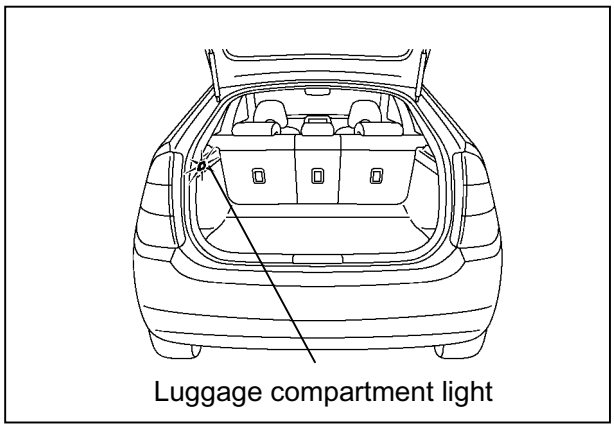

C47. CHECK LUGGAGE COMPARTMENT LIGHT

Check that the light illuminates when the back door is opened.

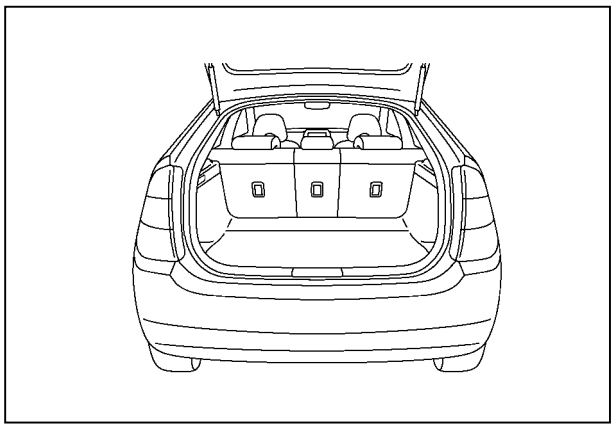

C48. CHECK LUGGAGE COMPARTMENT TRIM AND FLOOR MAT FIT

1. Visually and manually check the luggage compartment trim and floor mat for proper fit.

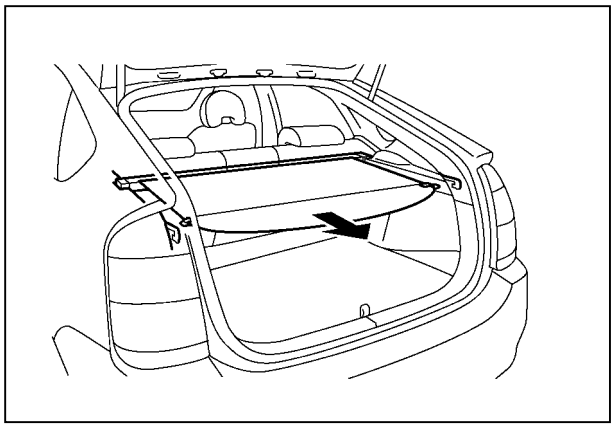

2. Check that the tonneau cover operates.

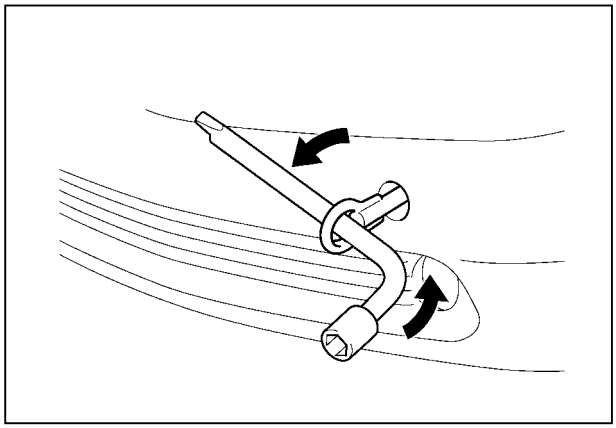

C49. REMOVE EMERGENCY TOWING EYELET

1. Remove the emergency towing eyelet from the front bumper.

2. Install the cover(s) into emergency towing eyelet hole(s).

   HINT :

   - The cover(s) are stored in the glove compartment, etc.
   - The removed emergency towing eyelet is stored in the tool bag, etc.

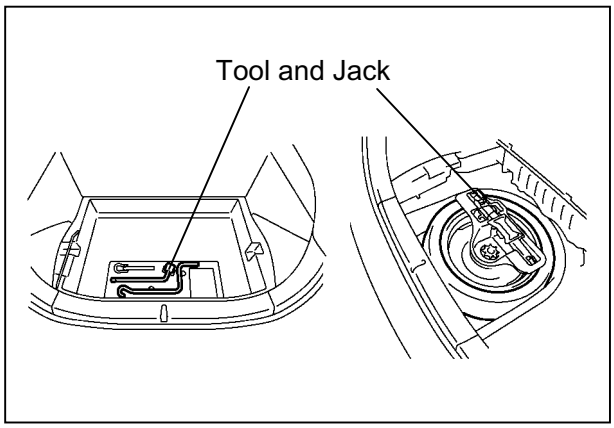

C50. CHECK JACK AND TOOL INSTALLATION

Check that the tool set and jack are in their proper place.

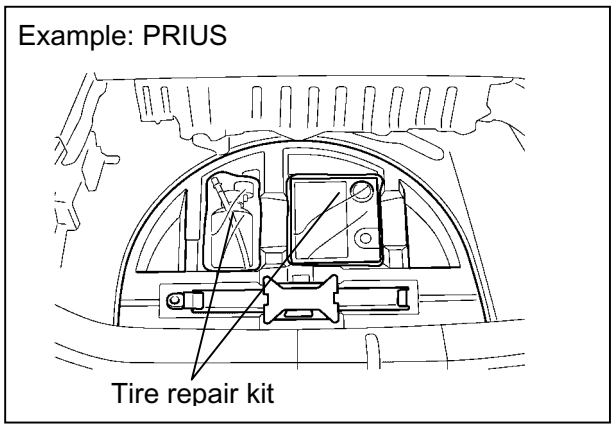

C51. CHECK TIRE REPAIR KIT INSTALLATION

1. Check that the tire repair kit is in its proper place.

2. Check the operation of the tire repair kit compressor.

   a. Insert the power supply plug for the compressor into the vehicle's accessory socket.

   b. Turn the hybrid system to the "IG-ON" position.

   c. Check the operation of the compressor with the compressor switch turned on.

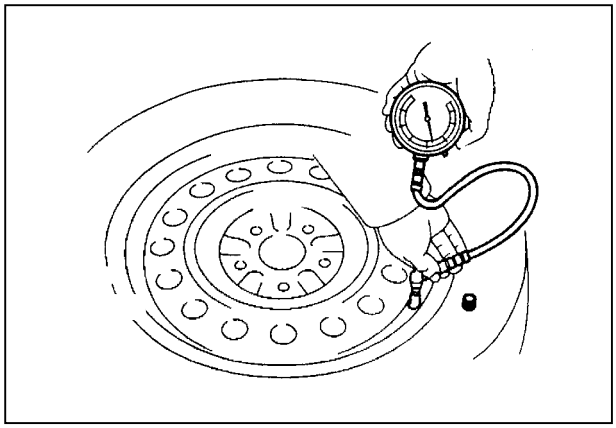

C52. CHECK SPARE TIRE PRESSURE AND INSTALLATION

HINT : Refer to the Owner's Manual.

1. Check and adjust inflation pressure to the road specification.

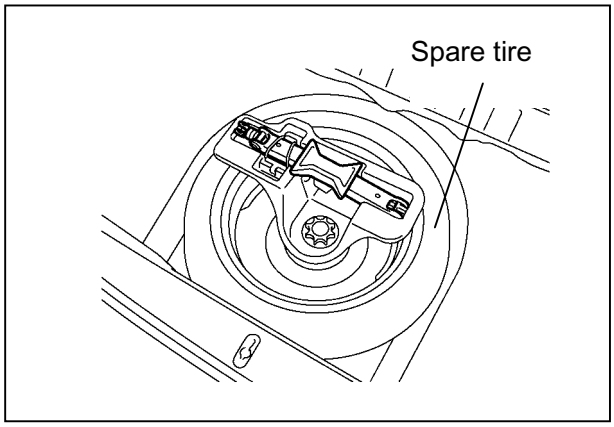

2. Check that the spare tire is in its proper place and securely fastened.

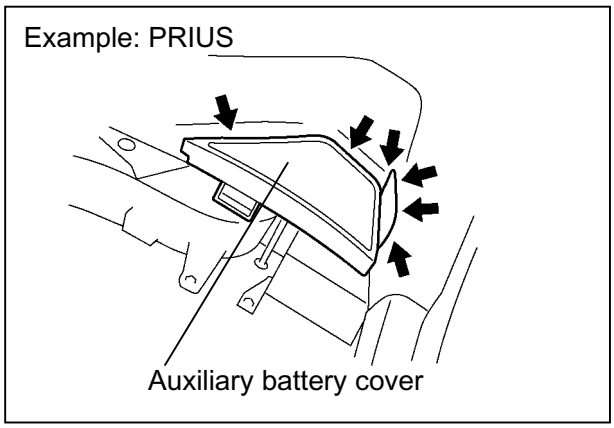

C53. CHECK 12-VOLTS AUXILIARY BATTERY TERMINAL TIGHTNESS

1. Turn off all lights and accessories.
2. Stop the hybrid system (the “READY” light is off).
3. Remove the auxiliary battery cover.

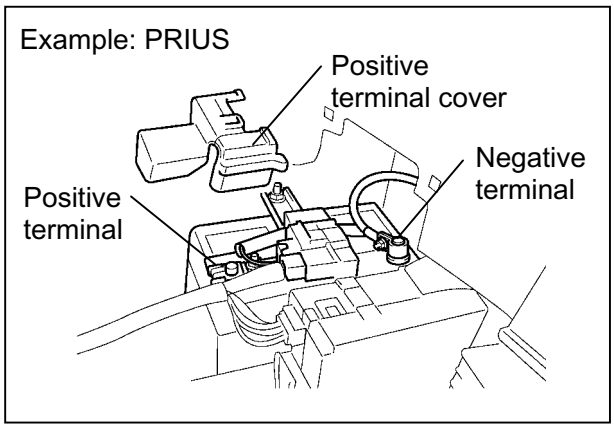

4. Remove the positive terminal cover.
5. Check that the terminals are tightly connected and the clamps properly installed.

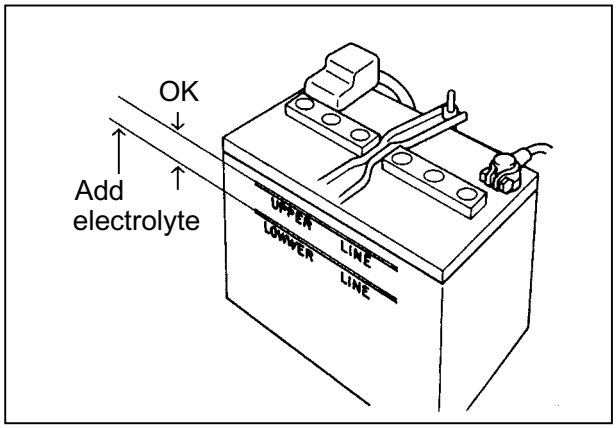

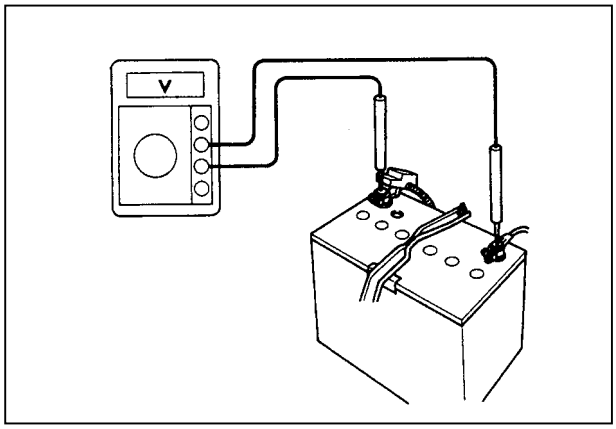

C54. CHECK 12-VOLTS AUXILIARY BATTERY ELECTROLYTE AND CHARGE LEVEL

1. Check the electrolyte level.

2. Using a digital voltmeter, measure the open circuit battery voltage between the terminals. As necessary, charge the auxiliary battery at 3.5 amperes for the time according to the measured battery voltage.

HINT :

- For details on the auxiliary battery charge, see the “Maintenance for HV Battery and Auxiliary Battery”, or the Service Bulletin.
- Before you disconnect the auxiliary battery, confirm the shift position is in the “P” position and apply the parking brake completely.
- With the battery disconnected at the auxiliary battery charging procedure, if the back door is closed, the door will be locked. To unlock the door, pull the security opener in the luggage storage box. For details, refer to the Owner’s Manual.
- If the negative terminal of the battery is reconnected, even if the “POWER” switch is pressed once, the hybrid system may not start. At this time, the “READY” light is off. In this case, press the “POWER” switch again to start the hybrid system (the “READY” light is on). If the hybrid system still does not start (the “READY” light is off), refer to the Repair Manual.

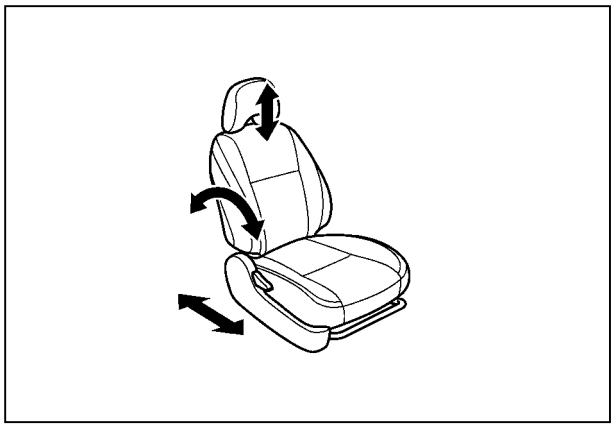

C55. CHECK PASSENGER’S SEAT AND PASSENGER’S SEAT BELT OPERATION

1. Check that the seat slides smoothly, reclines properly, folds or removes properly and locks securely in any position.
   (a) Seat slide adjustment
   (b) Seat reclining adjustment
   (c) Walk-in operation
   (d) Headrest adjustment

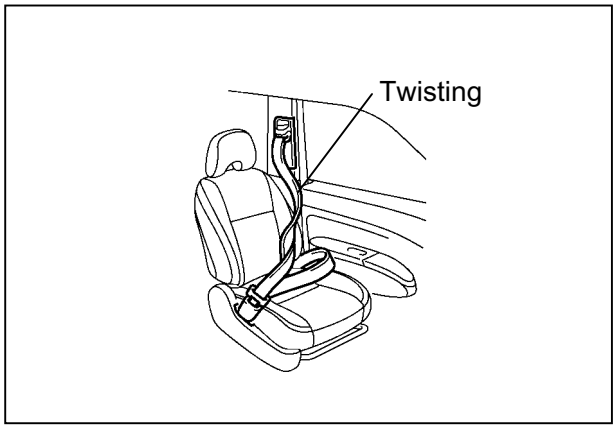

2. Visually check the seat belt appearance and check for smooth operation.

   (a) Twisting, dirt and damage

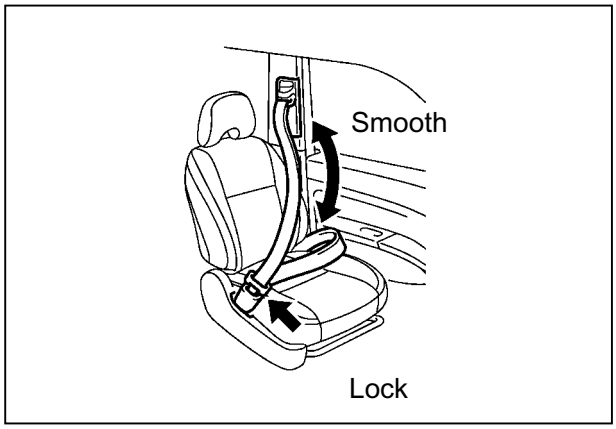

   (b) Smooth extension and retraction

   (c) Secure locking and smooth release

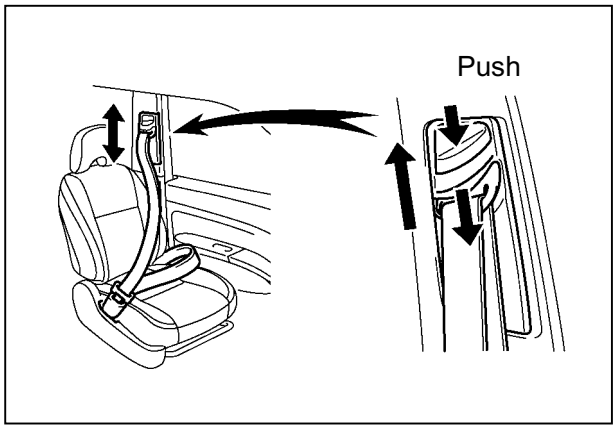

3. Check that the adjustable shoulder belt anchor moves smoothly and locks securely.

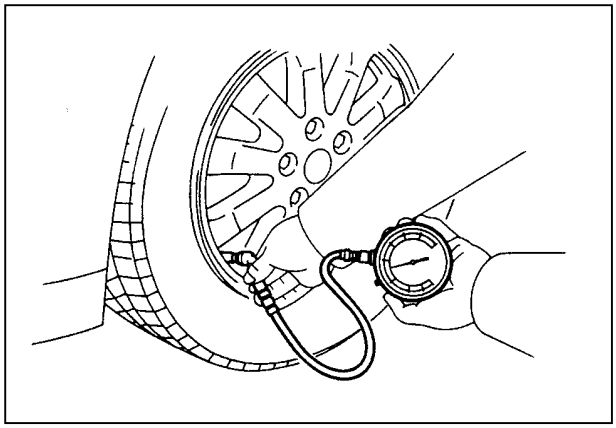

C56. ADJUST TIRE PRESSURE

HINT :

- After initializing the tire pressure warning system, this operation is unnecessary.
- Tires must be cold when checked.
- For the specific air pressure values, refer to the Owner's Manual.

Use the tire pressure gauge to adjust the inflation pressure to the specified pressure.

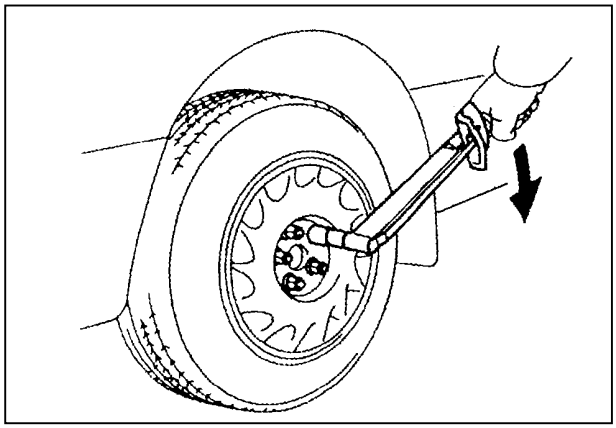

D. UNDER VEHICLE

CAUTION :

- **Do not touch the orange cable during the operation.**
- **After making sure the hybrid system has stopped (the "READY" light is off), perform the following inspections.**

D01. CHECK WHEEL HUB NUT TORQUE

With a torque wrench, make sure the hub nuts on all the wheels are tightened to the specified torque.

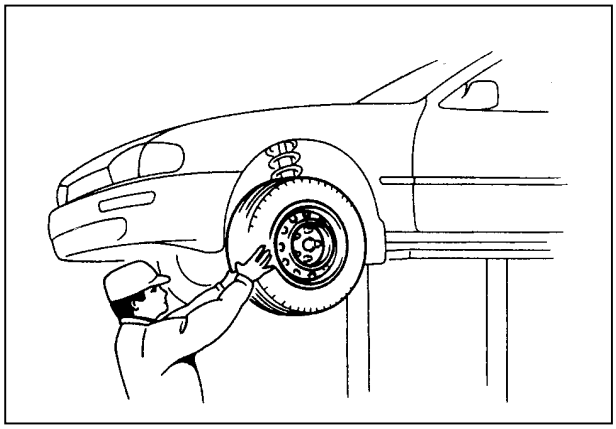

D02. INSPECT TIRES FOR DEFECTS AND DAMAGE

Visually check all tires for defects and/or damage.

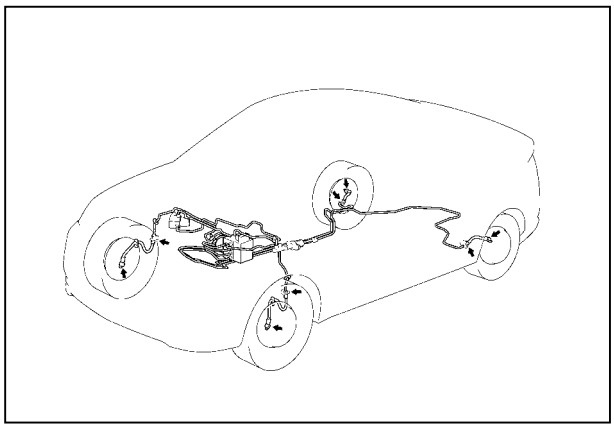

D03. INSPECT FOR FUEL, OIL, COOLANT OR OTHER FLUID LEAKS

Visually check for coolant, fuel, oil and fluid leakage from each of the following components :

(a) Brake pipe line

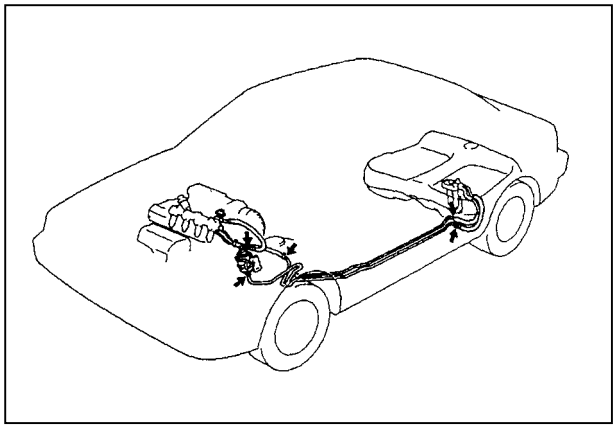

(b) Fuel pipe line

(c) Engine

(d) Transmission

Example: PRIUS

Engine and transmission

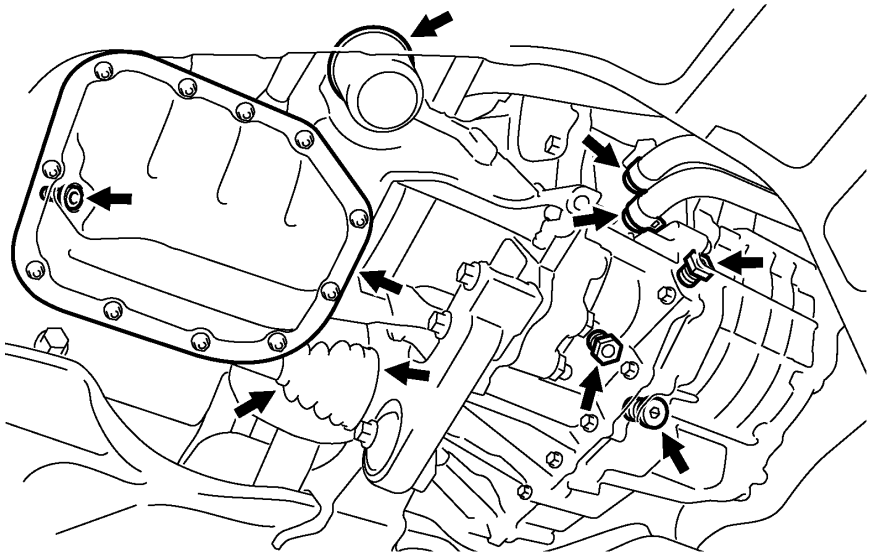

D04. INSPECT TIGHTNESS OF BOLTS AND NUTS ON CHASSIS AND POWER TRAIN

Check the tightness of bolts and nuts on the chassis and power train.

Example: PRIUS

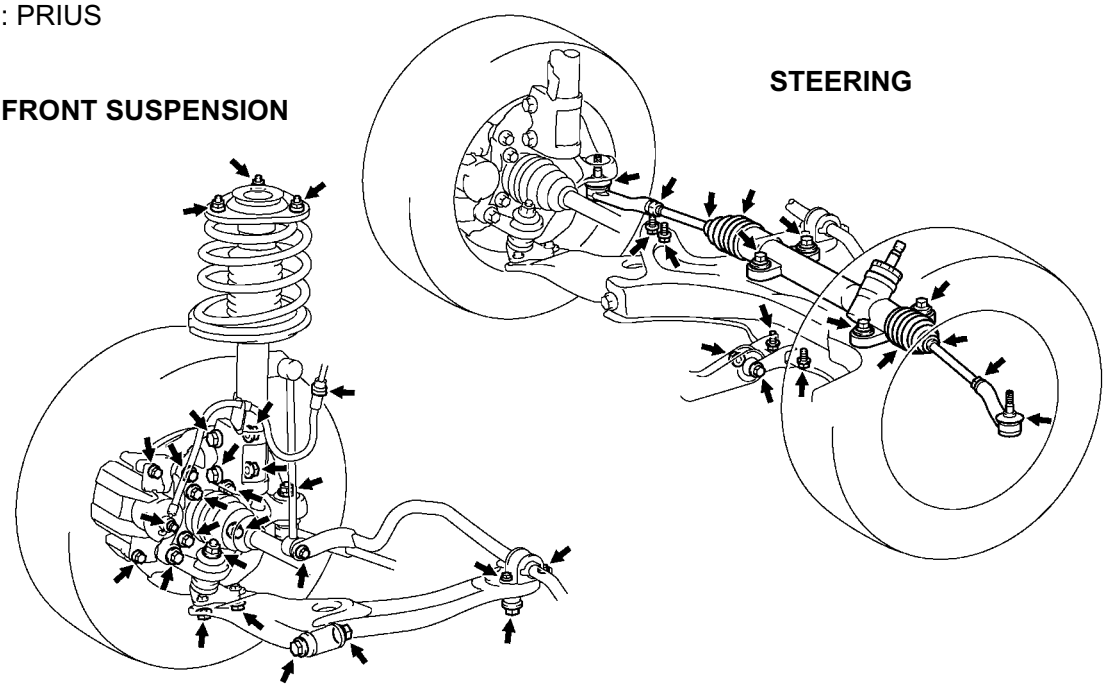

Example: PRIUS

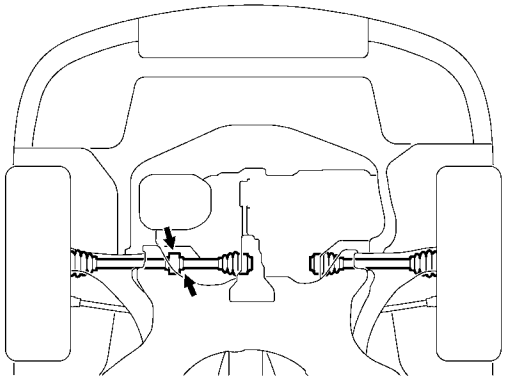

POWER TRAIN

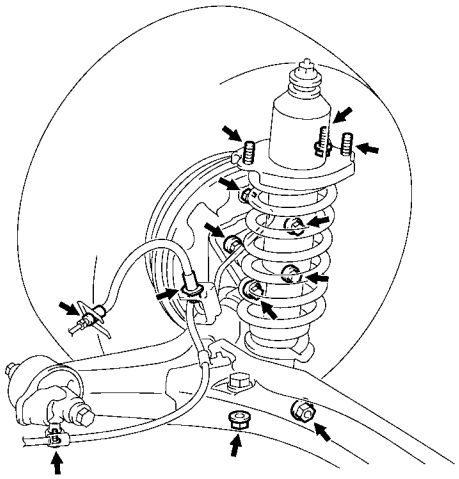

REAR SUSPENSION

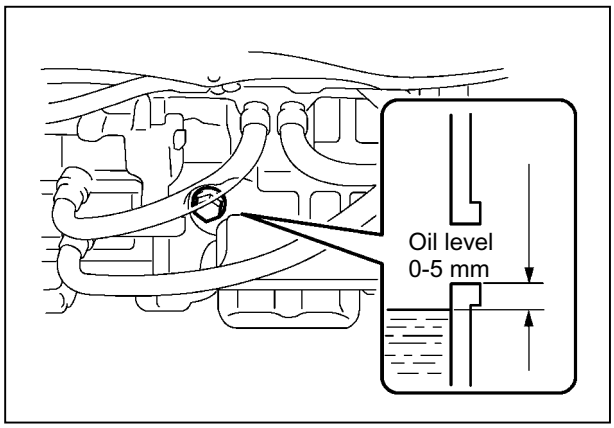

D05. CHECK HYBRID TRANSAXLE OIL LEVEL

1. Remove the hybrid transaxle oil level plug.
2. Check the hybrid transaxle oil level. If low, add ATF WS or equivalent.
3. Install the hybrid transaxle oil level plug.

   Torque: 39.2 N·m (400 kgf·cm, 29 ft·lbf)

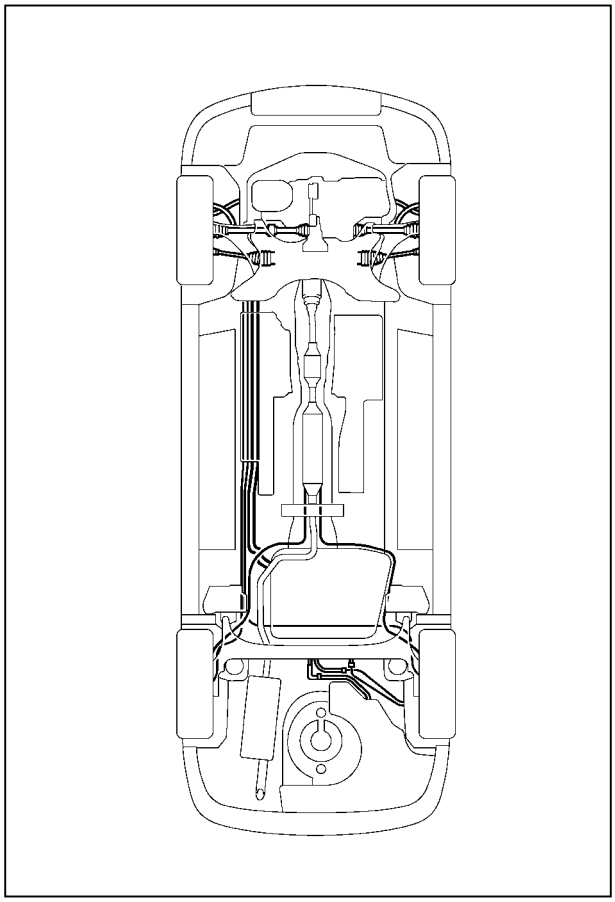

D06. INSPECT UNDER VEHICLE CONDITION FOR DAMAGE, RUST, ETC.

1. Visually and by hand inspect floor panel, exhaust pipe, etc. for damage, rust etc.

2. Visually and manually check the pipe lines, cable, boots, and hoses for installation, clamping, connection and damage.

   (a) Brake pipes, hoses and protector

   (b) Fuel pipe, hoses and protector

   (c) Steering linkage with dust boots

   (d) Drive shaft boots

   (e) Parking brake cable

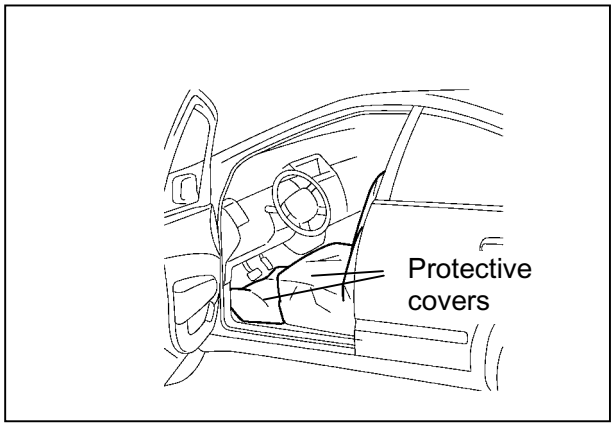

E. ROAD TEST

HINT : Make sure protective covers are in place on the seats and carpet prior to starting the road test.

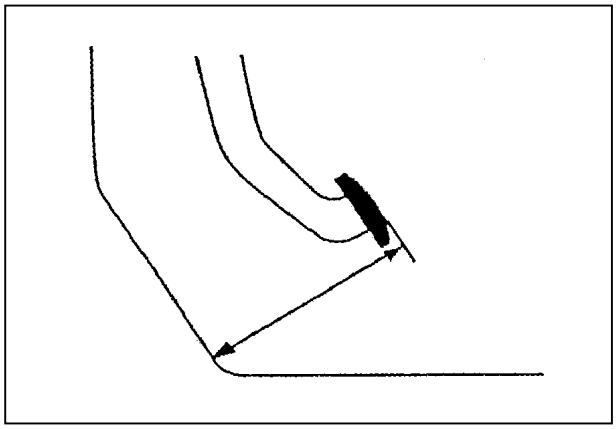

E01. CHECK BRAKE PEDAL HEIGHT, FREE PLAY AND RESERVE DISTANCE

1. Check the height of the brake pedal.

HINT : For details, refer to the Repair Manual.

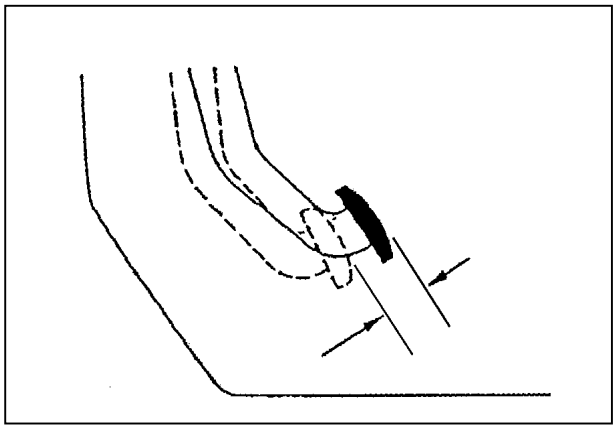

2. Check the freeplay of the brake pedal.

HINT : With the hybrid system off (the “READY” light is off), press the brake pedal several times to reduce the vacuum in the booster. For details, refer to the Repair Manual.

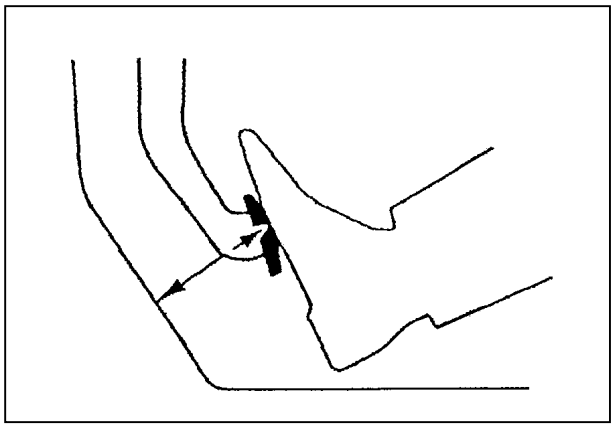

3. Check the brake pedal reserve distance.

HINT : With the hybrid system running (the “READY” light is on), press hard on the brake pedal. For details, refer to the Repair Manual.

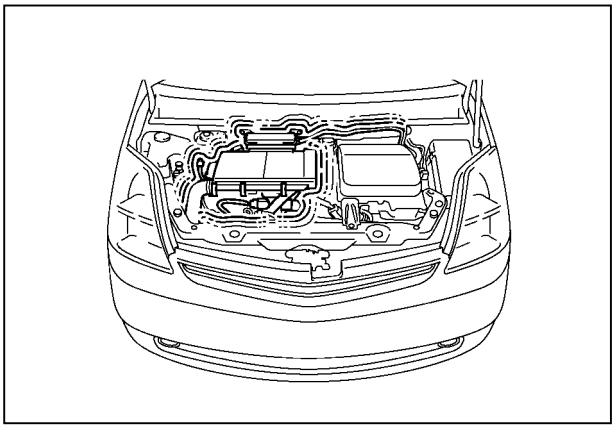

E02. CHECK ENGINE OPERATION AT NORMAL OPERATING TEMPERATURE

Check that the engine operation is smooth at the normal operating temperature.

(a) Noise and vibration

(b) Rough idle

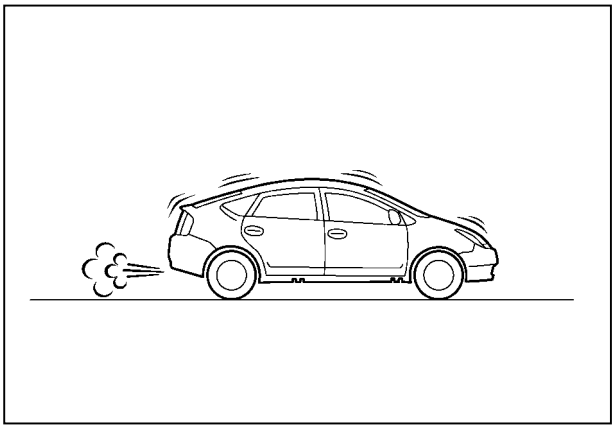

E03. CHECK DRIVING PERFORMANCE AND DRIVEABILITY

1. Check hybrid system performance over a broad range of driving conditions, including acceleration, cruising and deceleration.

2. Check that the hybrid system operation is normal, smooth and responsive.

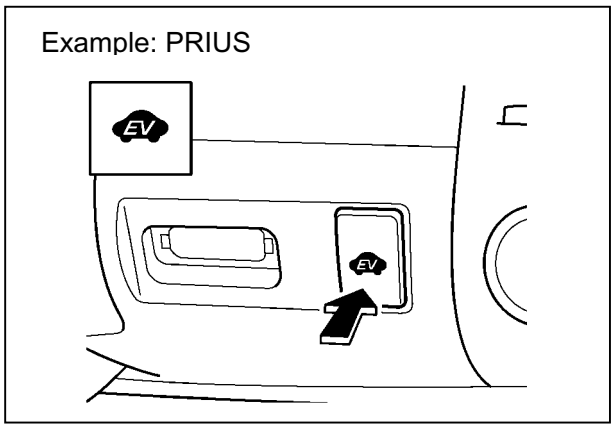

E04. CHECK EV - DRIVE OPERATION

Push the “EV” switch, check that the indicator will illuminate, and that the vehicle will run just in the EV - drive mode.

HINT : Depending on the SOC (state of charge) of the hybrid vehicle battery, it may not be possible to change to the EV - drive mode.

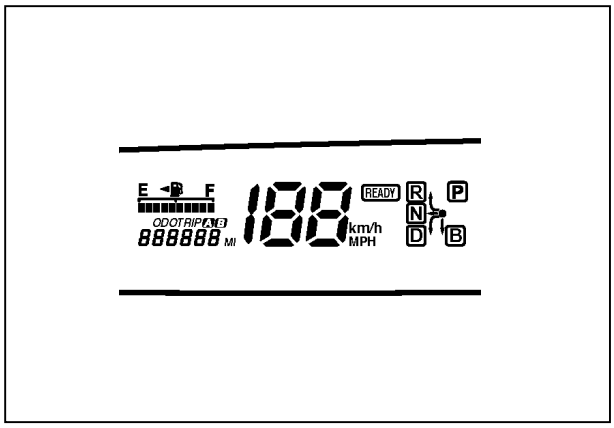

E05. CHECK COMBINATION METER OPERATION AND INDICATOR LIGHTS

(Speedometer, tachometer, heat gauge, etc.)

1. Check that the meters and gauges operate properly and move smoothly.

2. Check that each indicator light illuminates properly.

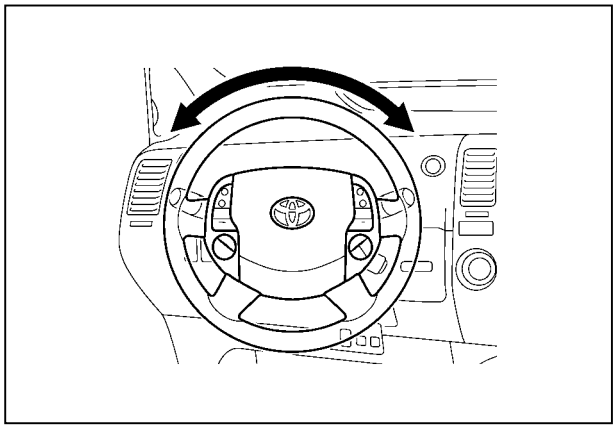

E06. CHECK STEERING OPERATION

1. Check for smooth turning operation and unusual noise.

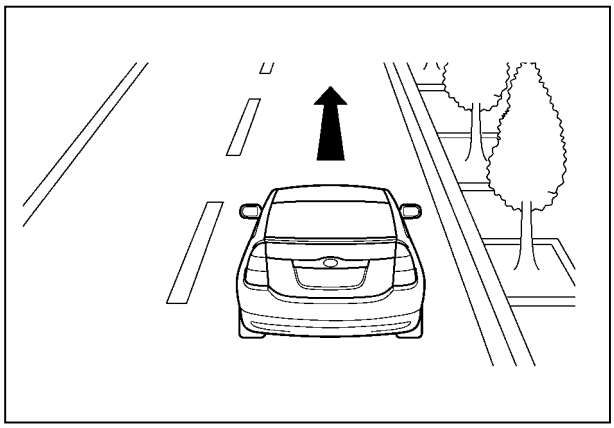

2. Check that the steering wheel is correctly aligned when driving on a level road surface.

3. Check that the vehicle does not pull to one side when driving on a level road surface.

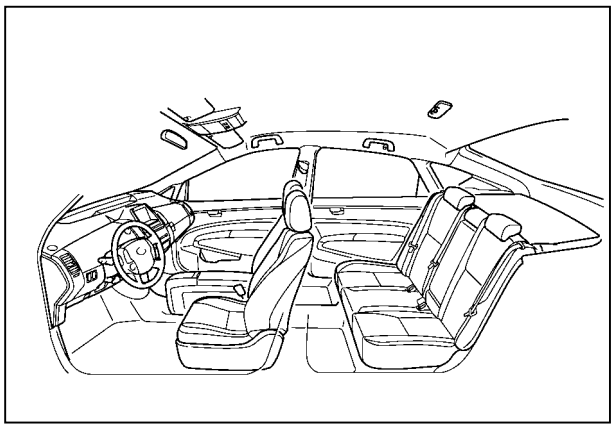

E07. INSPECT FOR ANY ABNORMAL NOISE AND VIBRATION

1. Check for squeaks and rattles.
   (a) Instrument panel
   (b) Door
   (c) Trim
   (d) Others

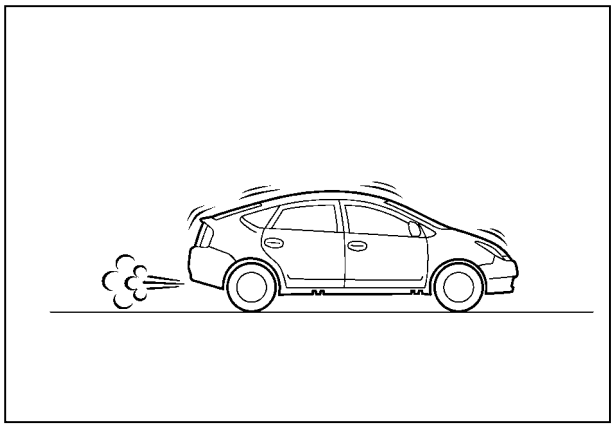

2. Check for abnormal noise and vibration while the vehicle is in motion.
   (a) Power train (engine, drive shaft, etc.)
   (b) Wind noise

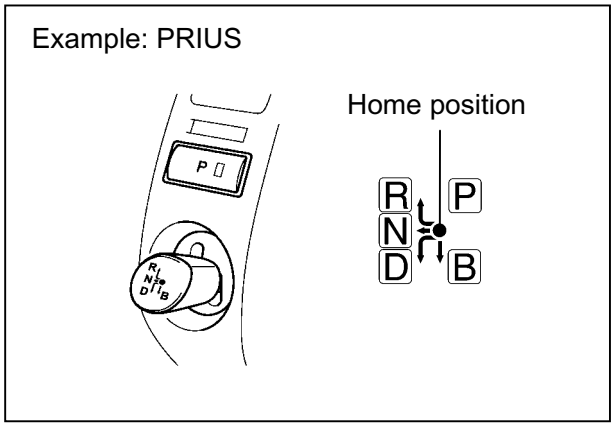

E08. CHECK OPERATION OF HYBRID TRANSAXLE

HINT : For details on operational methods, refer to the Owner's Manual.

1. Check that the shift lever can be moved smoothly to each position, and that it returns to the home position when it is let go.

2. When the shift lever is in each position, check that the appropriate indicator box illuminates. When the shift lever is in the “P” position, check that the “P” position switch light illuminates.

3. Check the transaxle operation at each shift position.

   P: Parking, hybrid system starting (the “READY” light is on) and key removal position
   R: Reverse position
   N: Neutral position
   D: Normal driving position
   B: Engine braking position

   HINT :

   - Only when the shift lever is in the “D” position can the “B” position indicator be displayed, and the shift lever be shifted from the “D” position to the “B” position.
   - When the shift lever is in the “B” position and the accelerator pedal is released, the engine brake applies.

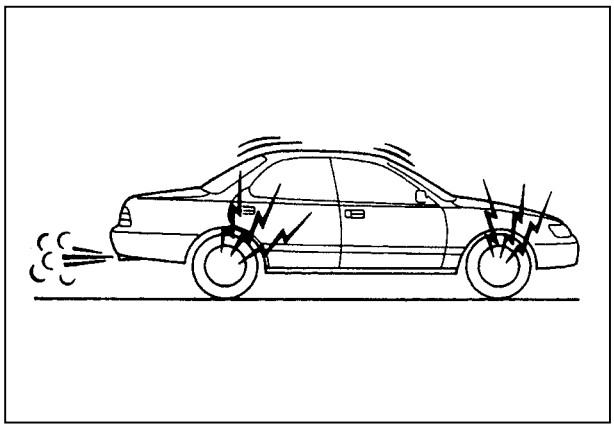

E09. CHECK BRAKE AND PARKING BRAKE OPERATION

HINT :

In order to increase the brake accumulator pressure, the brake pump may automatically operate and the operating noise may be heard. With the hybrid system in the “OFF” position, the brake pump may also operate automatically. These are not malfunctions.

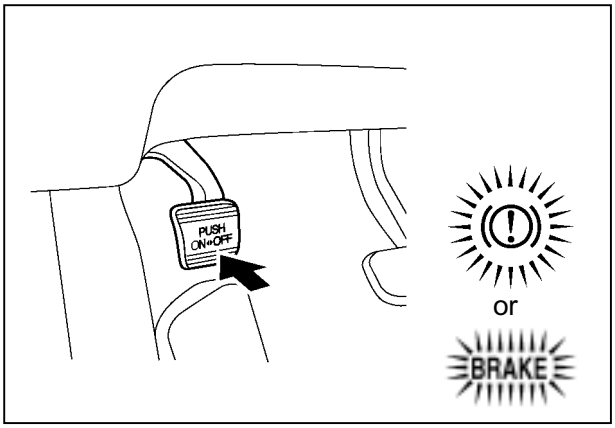

1. Check the brake effort, and check for pull to one side and for abnormal squeak.

2. Check the warning light operation and the travel of the parking brake.

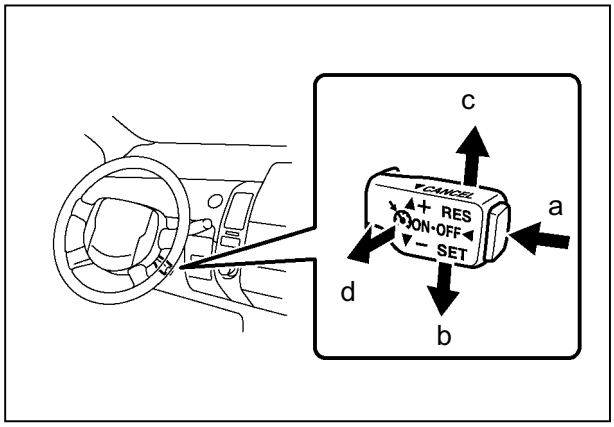

E10. CHECK CRUISE CONTROL OPERATION

1. Check the cruise control functions.

   (a) MAIN SWITCH

   (b) SET/COAST (-)

   (c) RESUME/ACCEL (+)

   (d) CANCEL

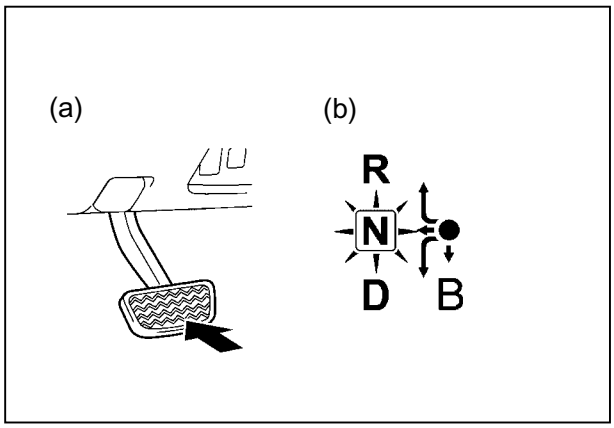

2. Check that the cruise control speed is cancelled by :

   (a) Pressing the brake pedal

   (b) Shifting the selector lever to the “N” or “B” position

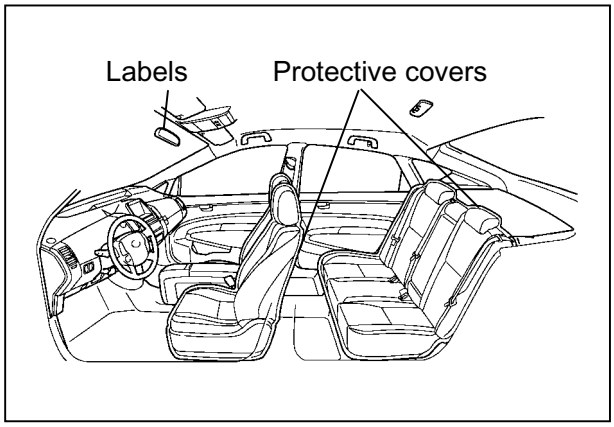

F. FINAL INSPECTION AND CLEANING

F01. REMOVE UNNECESSARY LABELS, TAGS, STICKERS, ETC.

HINT : Remove the interior protective covers just before delivery to the customer.

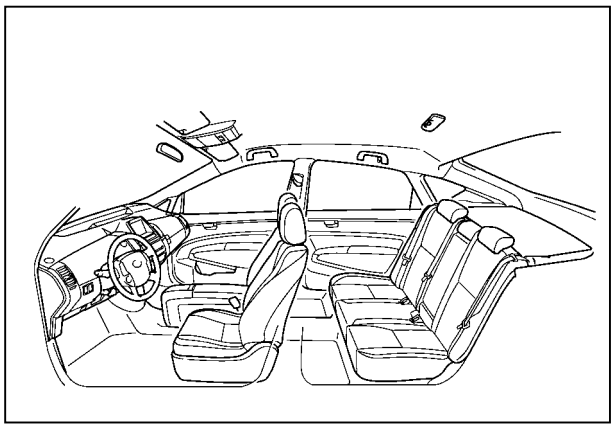

F02. VISUALLY INSPECT ALL INTERIOR PARTS FOR INSTALLATION, DAMAGE, FIT, DIRT, ETC.

Check the appearance of the interior parts visually and by hand.

Check for :

(a) Dirt

(b) Scratches (superficial, sub-surface scratches, chipping)

(c) Damage

(d) Fit and alignment

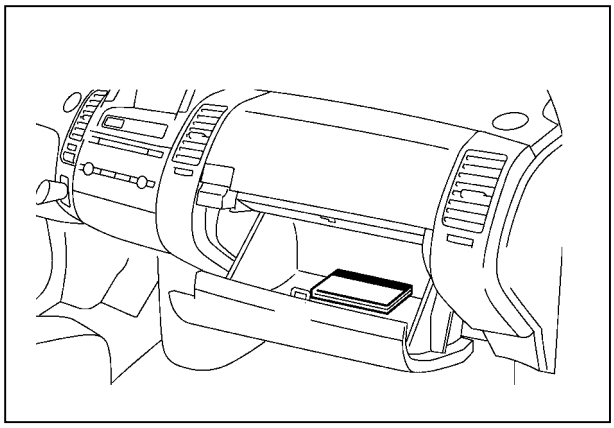

F03. CHECK OWNER INFORMATION MATERIALS

Check that the following manuals are placed in the glove compartment.

(a) Owner's Manual

(b) Others

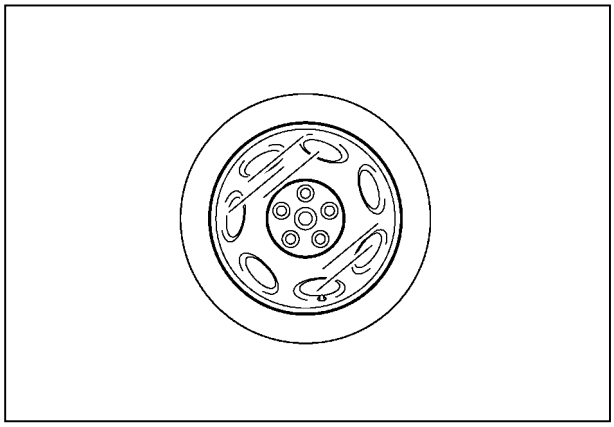

F04. REMOVE WHEEL FILM

Visually inspect rotors for rust.

HINT : For the best rotor rust prevention, retain wheel film on vehicle until just prior to customer delivery.

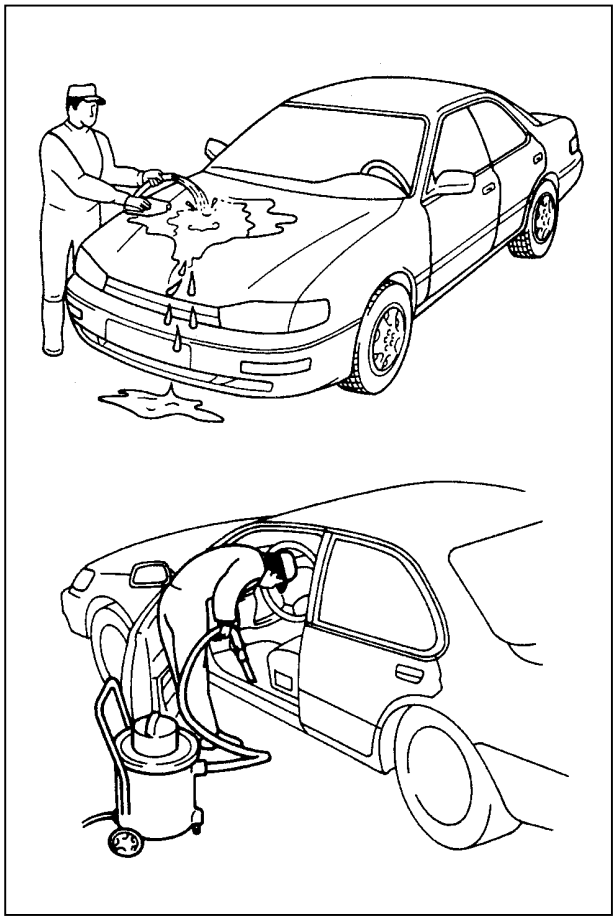

F05. WASH AND CLEAN VEHICLE

Wash and clean the body exterior and interior.

HINT : We recommend that you wash and clean the vehicle by hand.

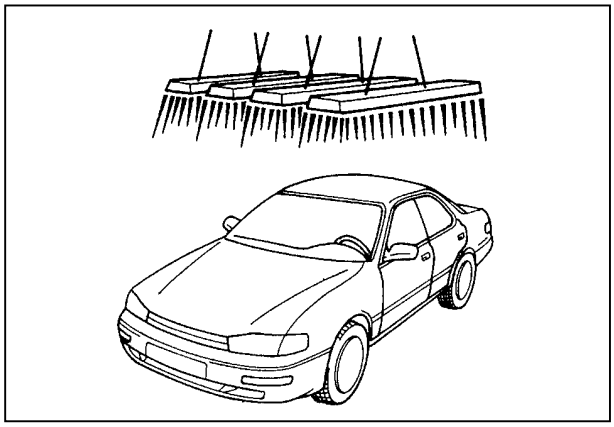

F06. INSPECT PAINT FINISH FOR SCRATCHES, CHIPS, DAMAGE, ETC.

1. Illumination in the paint inspection area should be more than 800 lux on the top and side surfaces of the vehicle body.

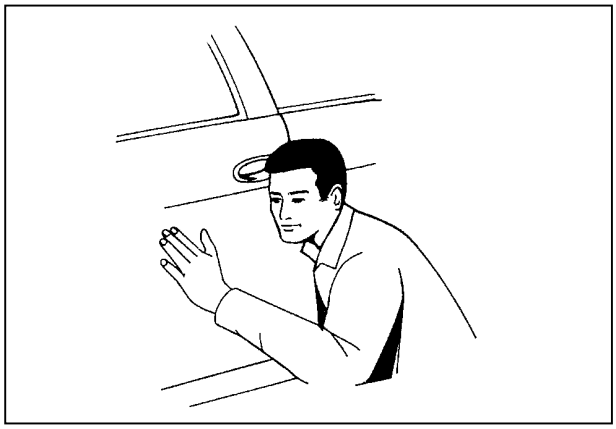

2. Check each panel visually and by hand.

   (a) Scratches (superficial, sub-surface scratches, chipping)

   (b) Dents

   (c) Blemishes

   HINT : Damage is found more easily by looking at an oblique angle.

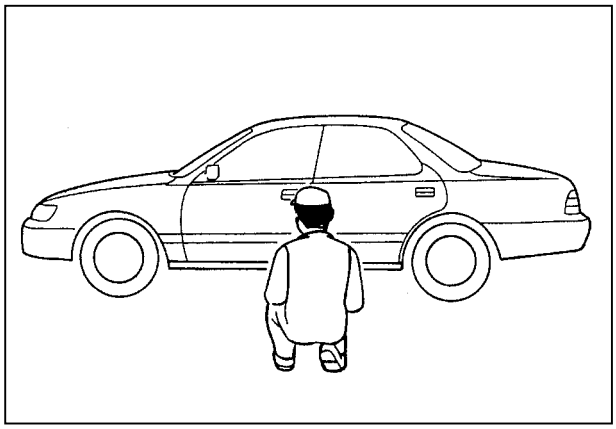

F07. INSPECT EXTERIOR BODY PARTS FOR PROPER INSTALLATION, DAMAGE, RUST, ETC.

Check all exterior parts visually and by hand.

(a) Scratches (superficial, sub-surface scratches, chipping)

(b) Molding and bumper for damage, floating and looseness.

-MEMO-

VEHICLE DELIVERY INSPECTION

Page

A. CHECK 64

B. PREPARATION FOR DELIVERY 64

Except immediately after PDS has been performed on the vehicle, we recommend that you inspect the vehicle parts that are likely to deteriorate before delivering the vehicle to the customer.

A. CHECK

A01. Check battery voltage

A02. Check tire pressure

A03. Check vehicle travel
(Check basic driving performance)

A04. Check for scratches, dirt, rust, etc.

B. PREPARATION FOR DELIVERY

HINT : Some protectors were not removed from the vehicle in the “F. FINAL INSPECTION AND CLEANING” section in order to prevent vehicle deterioration. Remove these protectors now.

B01. Remove the following protection covers:

- Plastic door edge protectors
- Seat and door trim protection covers
- Floor carpet protection covers (paper)
- Step covers

B02. Clean the vehicle interior and exterior

MAINTENANCE FOR HV BATTERY AND AUXILIARY BATTERY

Page

MAINTENANCE FOR HV BATTERY AND AUXILIARY BATTERY 66

MAINTENANCE PROCEDURE 67

MAINTENANCE FOR HV BATTERY AND AUXILIARY BATTERY

The hybrid vehicle is equipped with 2 types of special batteries, one is HV (Hybrid Vehicle) battery and the other is 12-volt auxiliary battery.

If the hybrid vehicle is put into storage, the SOC (state of charge) of its HV battery and auxiliary battery will gradually decrease.

To prevent the battery from deteriorating during storage, proper maintenance is necessary. The battery maintenance described here is for the Prius. For details on battery maintenance procedures for other models, refer to the Service Bulletin.

HINT :

1. After the battery terminals have been removed, or after the battery is reinstalled following charging, the power windows, etc. must be initialized.

   For each initializing procedure, refer to the Service Bulletin.
2. Before you disconnect the auxiliary battery, confirm the shift position is in the “P” position and apply the parking brake completely.
3. With the battery disconnected at the auxiliary battery charging procedure, if the back door is closed, the door will be locked. To unlock the door, pull the security opener in the luggage storage box. For details, refer to the Owner’s Manual.
4. If the negative terminal of the battery is reconnected, even if the “POWER” switch is pressed once, the hybrid system may not start. At this time, the “READY” light is off. In this case, press the “POWER” switch again to start the hybrid system (the “READY” light is on). If the hybrid system still does not start (the “READY” light is off), refer to the Repair Manual.

HV battery and 12-volt auxiliary battery need the following maintenance service at Port of Entry and Dealers.

Maintenance Items

	Condition	Maintenance operation
A	Before delivery	Fully charge 12-volt auxiliary battery in slow charge (3.5 amperes). (Deliver the vehicle to the customer after it is fully charged)
B	In order to store for 10 days or more	Disconnect wire harness from exclusive jump starting terminal of 12-volt auxiliary battery in storage. (Prevent decreasing the SOC (state of charge) of the battery during storage due to parastic current)
C	Every two months	Keep “Hybrid System” on for 30 minutes. (In order to charge the HV battery and the auxiliary battery)

MAINTENANCE PROCEDURE

Page

A. BEFORE DELIVERY 68

B. IN ORDER TO STORE FOR 10 DAYS OR MORE..... 69

C. EVERY TWO MONTHS 71

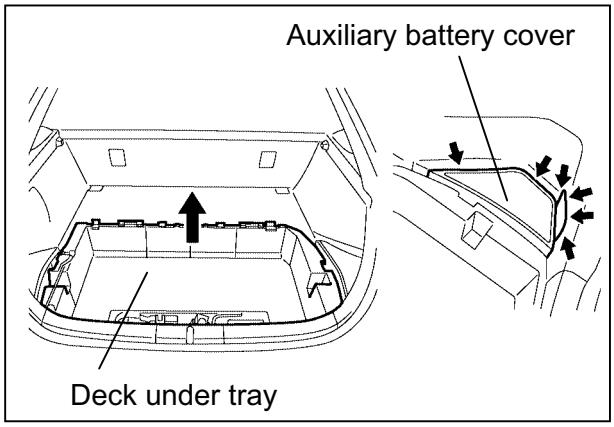

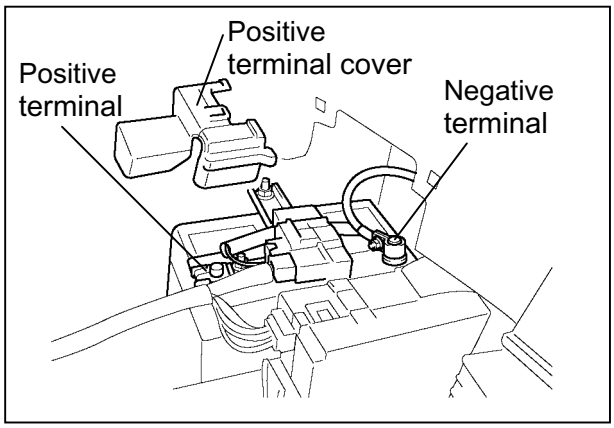

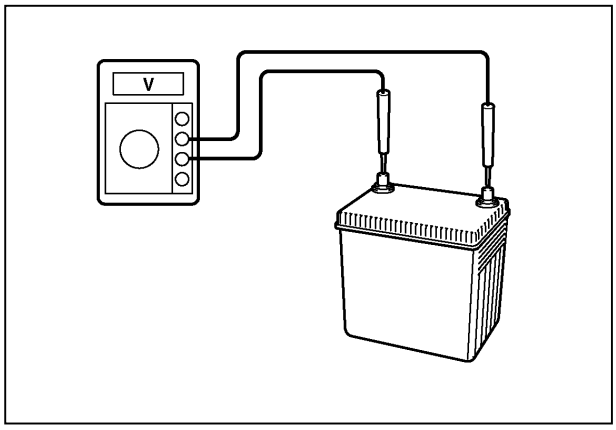

A. BEFORE DELIVERY

[Remove the auxiliary battery]

1. Turn off all lights and accessories.
2. Open the back door.
3. Remove the deck cover.
4. Remove the deck under tray and the auxiliary battery cover.
5. Disconnect the breather hose.
6. Remove the positive terminal cover.
7. Disconnect the negative terminal and then the positive terminal.
8. Remove the hold-down clamp and auxiliary battery.

[Charge the 12-volt auxiliary battery]

1. Using a digital voltmeter, measure the battery voltage between the terminals to determine the charging time.

Battery Voltage	Charging Time
Above 12.4 V	2 – 3 hours
12.0 V – 12.4 V	5 – 6 hours
11.9 V or below	8 – 10 hours*

* Do not charge over 10 hours.

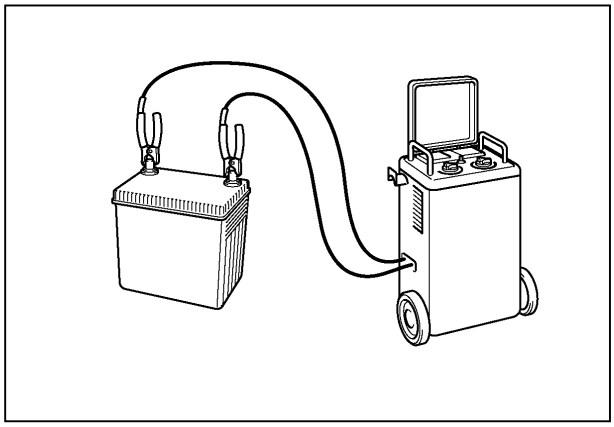

2. Charge the auxiliary battery at 3.5 amperes for the time determined in the above step.

CAUTION :

- **Charging current must not exceed 3.5 amperes. (Quick charge is prohibited.)**
- **Do not charge with the battery mounted on the vehicle.**
- **Charge in a well-ventilated area.**
- **Do not allow sparks or fire near the battery.**

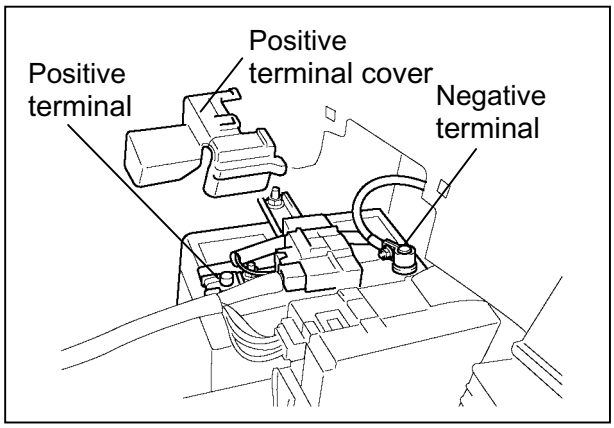

[Install the auxiliary battery]

1. Place the auxiliary battery in the correct position and install the hold-down clamp.
2. Connect the breather hose.
3. Connect the positive terminal first, and then the negative terminal.

   Torque: 5.9 N·m (60 kgf·cm, 4.3 ft·lbf)
4. Install the positive terminal cover.
5. Install the auxiliary battery cover and the deck under tray.
6. Install the deck cover.
7. Close the back door.

B. IN ORDER TO STORE FOR 10 DAYS OR MORE

[Remove the wire harness]

1. Turn off all lights and accessories.
2. Open the hood and remove the relay block cover.
3. Remove the cover (red) for the exclusive jump starting terminal.
4. Use a 10mm long socket to remove the nut.

NOTICE : When removing or installing the nut and wire harness, do not touch the inverter or other parts, as it may cause an electrical system breakdown.

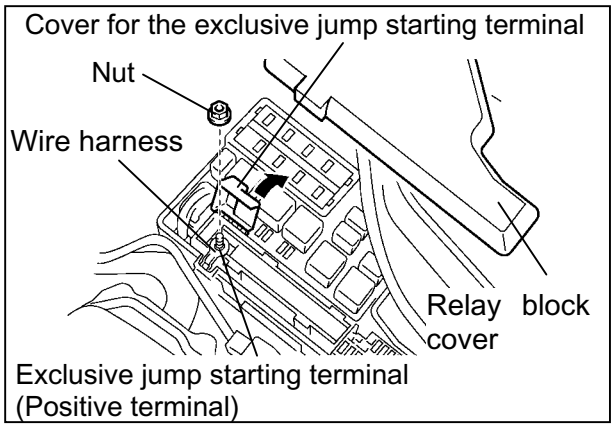

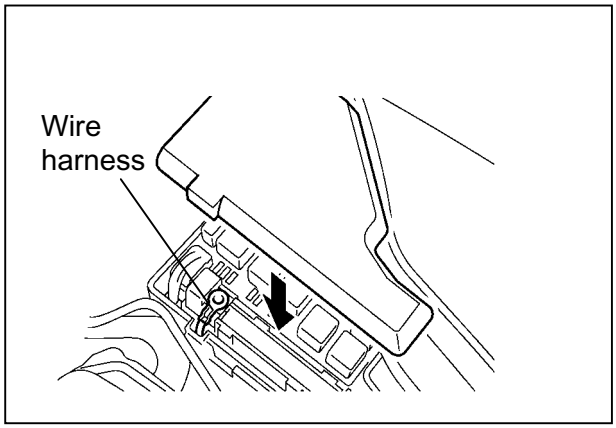

5. Use needle-nose pliers to pull up the wire harness from the exclusive jump starting terminal (positive terminal) and remove it.

6. Temporarily install the nut on the exclusive jump starting terminal.

7. Close the cover for the exclusive jump starting terminal, and place the wire harness on the cover.

8. After closing the relay block cover, close the hood.

HINT : When necessary to move the vehicle, reconnect the wire harness.

[Connect the wire harness]

HINT : After reconnecting the auxiliary battery, the power window must be initialized. For details, refer to the Service Bulletin.

1. Open the hood and remove the relay block cover.

2. Open the cover for the exclusive jump starting terminal.

3. Remove the temporarily installed nut, and after installing the wire harness on the exclusive jump starting terminal, securely tighten the nut.

   Torque:
   6.8–9.8 N·m (69–100 kgf·cm, 5.0–7.2 ft·lbf)

4. Close the cover for the exclusive jump starting terminal.

5. After closing the relay block cover, close the hood.

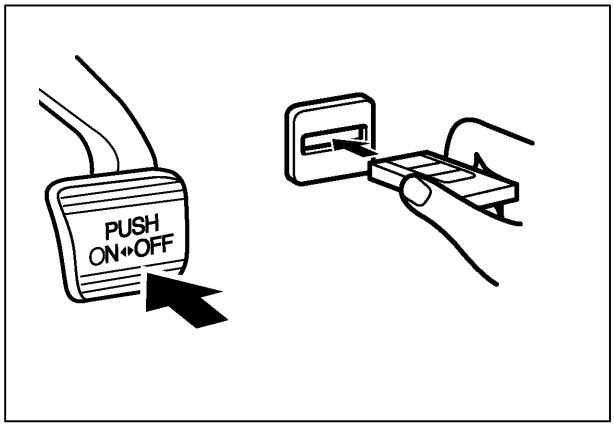

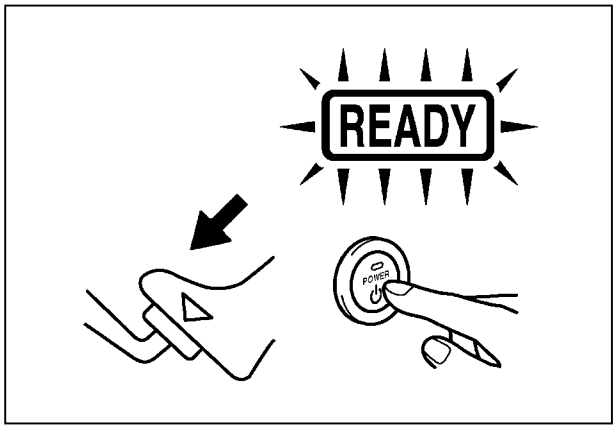

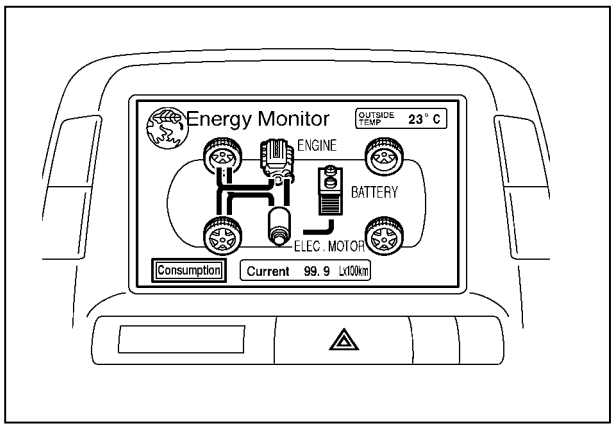

C. EVERY TWO MONTHS

HINT :

When remaining capacity of HV battery is low, the gasoline engine automatically starts and HV battery is charged by the generator. 12-volt auxiliary battery is also charged by HV battery regardless of the gasoline engine operation.

1. Park the vehicle in open air or connect the exhaust extraction hose to the exhaust pipe.

2. Apply the parking brake.

3. Make sure the key is fully inserted into the key slot.

4. With the brake pedal depressed, press the “POWER” switch and check that the “READY” light in the meter illuminates when the hybrid system starts (the “READY” light is on).

5. Turn off all lights and accessories.

6. Check that the shift lever is in the “P” position.

7. Keep the “READY” light on and charge the HV battery for 30 minutes.

TOYOTA
QUALITY SERVICE

OVERSEAS CUSTOMER SERVICE TECHNICAL DIVISION
TOYOTA MOTOR CORPORATION

PRINTED IN JAPAN
First Printing: July 2003
Pub. No. PDS001E